2006 Ninja® 500R PARTS DIAGRAM

Ignition System

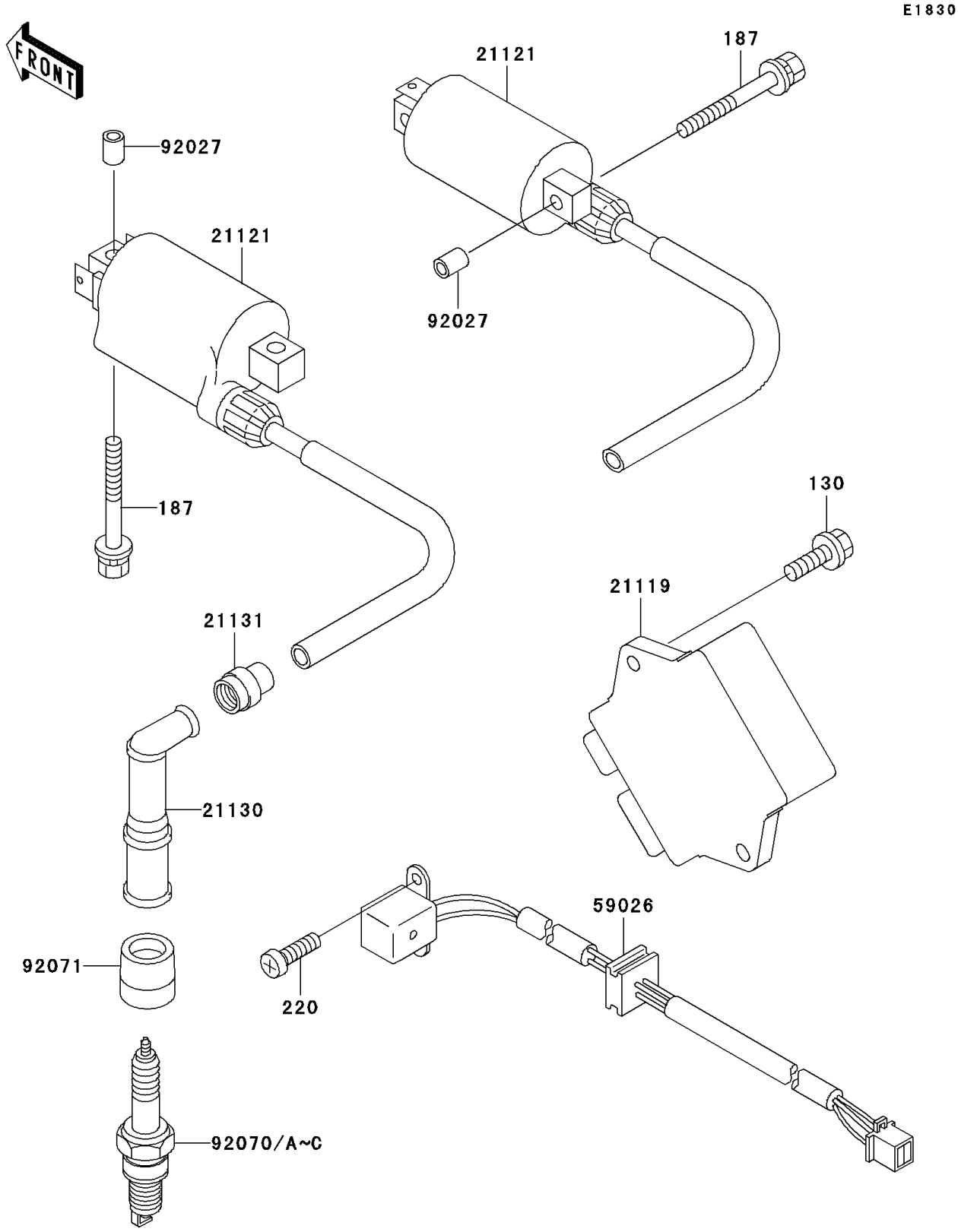

© 2024 Kawasaki Motors Corp., U.S.A.

2006 Ninja® 500R PARTS LIST

Ignition System

ITEM NAME	PART NUMBER	QUANTITY
BOLT-FLANGED,6X16 (Ref # 130)	130BA0616	2
BOLT-UPSET-WSP,6X25 (Ref # 187)	187BA0625	4
SCREW-PAN-CROSS,5X10 (Ref # 220)	220AA0510	2
IGNITER (Ref # 21119)	21119-1408	1
COIL-IGNITION (Ref # 21121)	21121-1153	2
CAP-SPARK PLUG (Ref # 21130)	21130-1068	2
GROMMET,HIGH TENSION (Ref # 21131)	21131-005	2
COIL-PULSING (Ref # 59026)	59026-1126	1
COLLAR,6.8X10X6 (Ref # 92027)	92027-103	4
PLUG-SPARK,X24ESR-U(ND) (Ref # 92070)		AR
PLUG-SPARK,X27ESR-U(ND) (Ref # 92070A)		2
PLUG-SPARK,DR9EA(NGK) (Ref # 92070B)	92070-1189	2
PLUG-SPARK,DR8EA(NGK) (Ref # 92070C)	92070-1199	AR
GROMMET,PLUG CAP (Ref # 92071)	92071-1146	2

© 2024 Kawasaki Motors Corp., U.S.A.