1991 Bayou 220 PARTS DIAGRAM

Reflector

F2790-0005

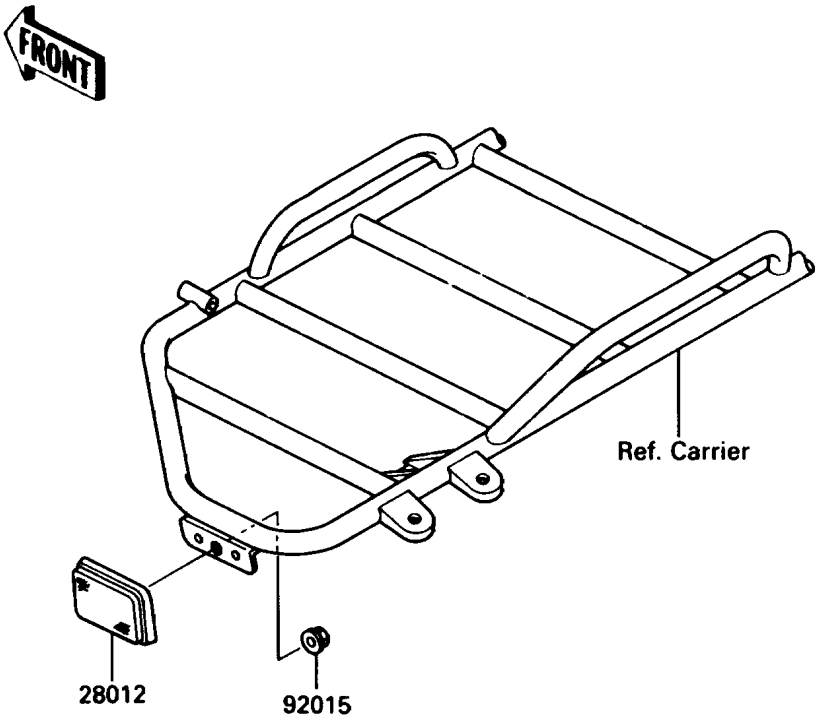

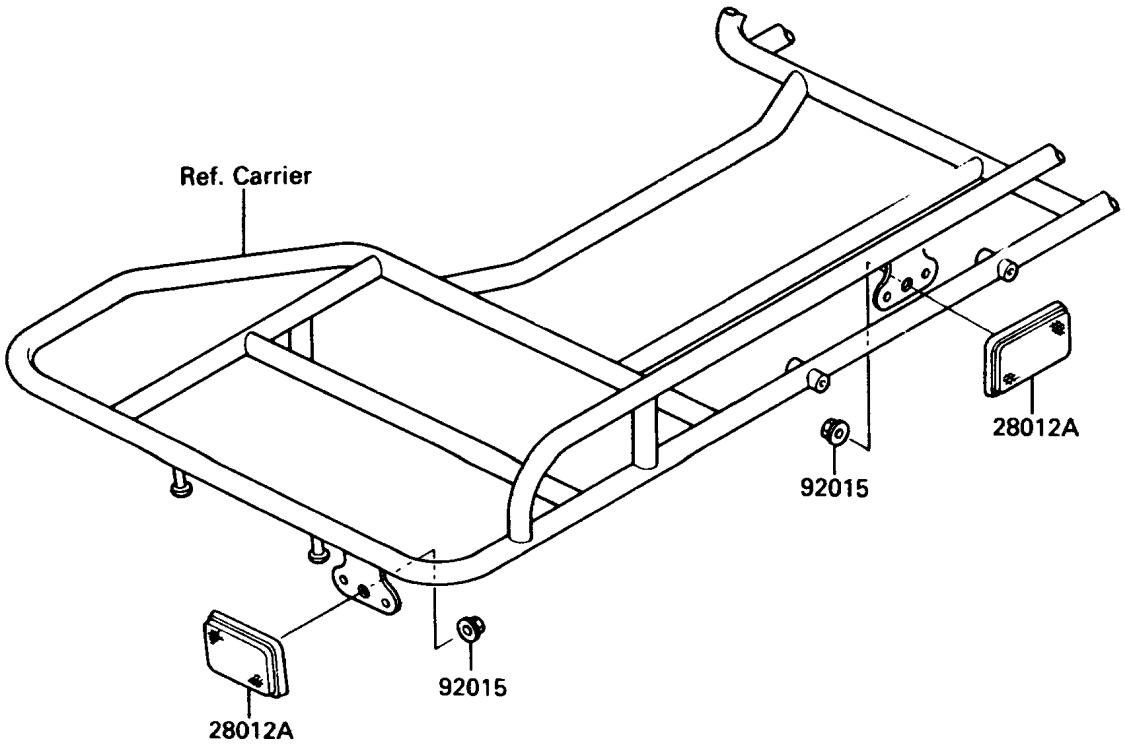

© 2025 Kawasaki Motors Corp., U.S.A.

1991 Bayou 220 PARTS LIST

Reflector

ITEM NAME	PART NUMBER	QUANTITY

© 2025 Kawasaki Motors Corp., U.S.A.