1991 Bayou 220 PARTS DIAGRAM

Electrical Equipment

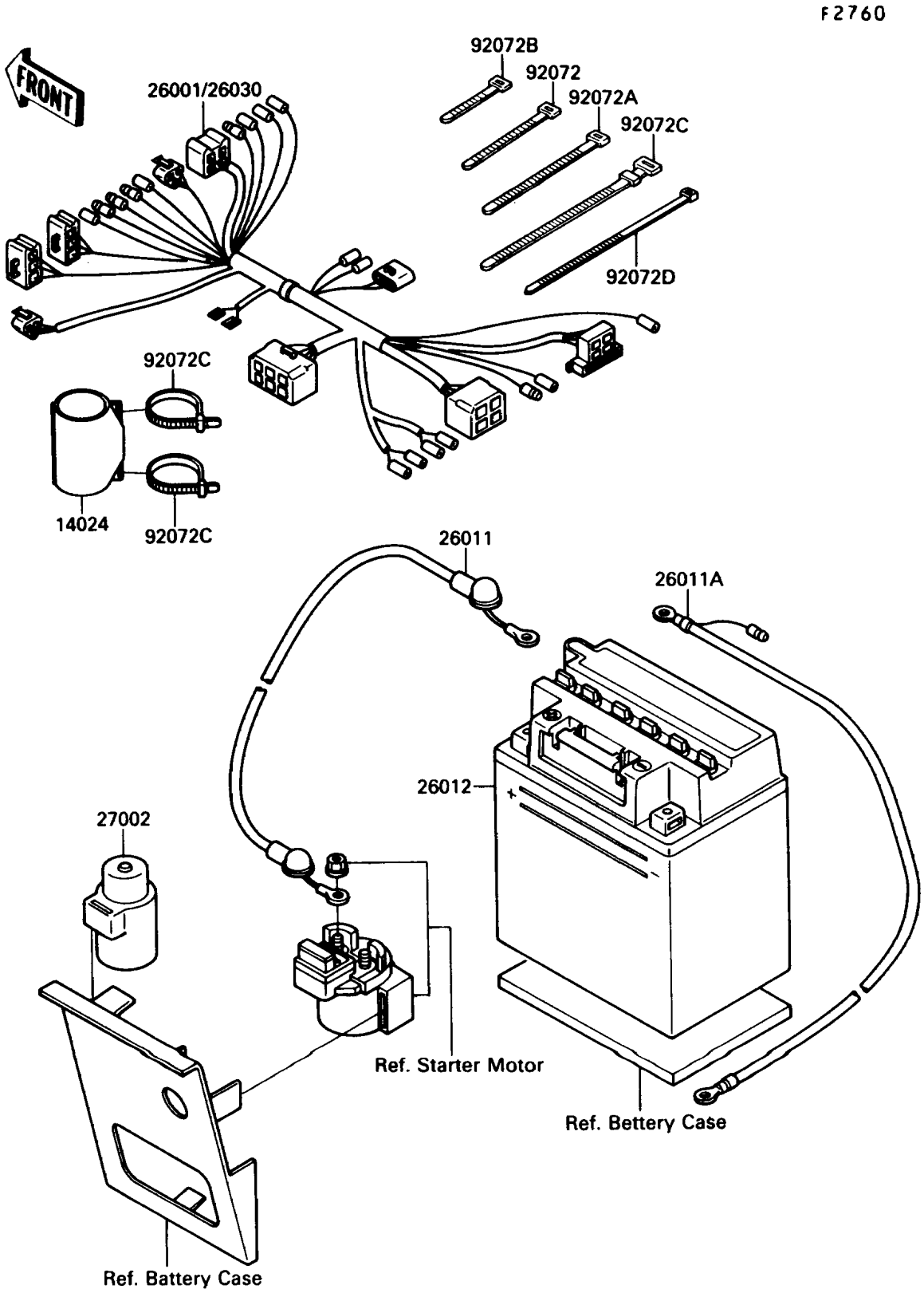

© 2025 Kawasaki Motors Corp., U.S.A.

1991 Bayou 220 PARTS LIST

Electrical Equipment

ITEM NAME	PART NUMBER	QUANTITY
COVER,COUPLER (Ref # 14024)	14024-1624	1
WIRE-LEAD,BATTERY(+) (Ref # 26011)	26011-1398	1
WIRE-LEAD,BATTERY(-) (Ref # 26011A)	26011-1399	1
BATTERY,12V 11AH,YB10A-A2 (Ref # 26012)	26012-1229	1
RELAY-ASSY (Ref # 27002)	27002-1051	1
BAND,L=149 (Ref # 92072A)	92072-031	2
BAND,L=186 (Ref # 92072C)	92072-056	3
BAND,L=188 (Ref # 92072D)	92072-1239	8
HARNESS,MAIN (Ref # 26001)	26001-1858	1
HARNESS,MAIN (Ref # 26030)	26030-1061	1
BAND,L=123 (Ref # 92072)	92072-030	2
BAND,L=123 (Ref # 92072)	92072-030	6

© 2025 Kawasaki Motors Corp., U.S.A.