1991 Bayou 220 PARTS DIAGRAM

Fuel Tank

F2410-0367

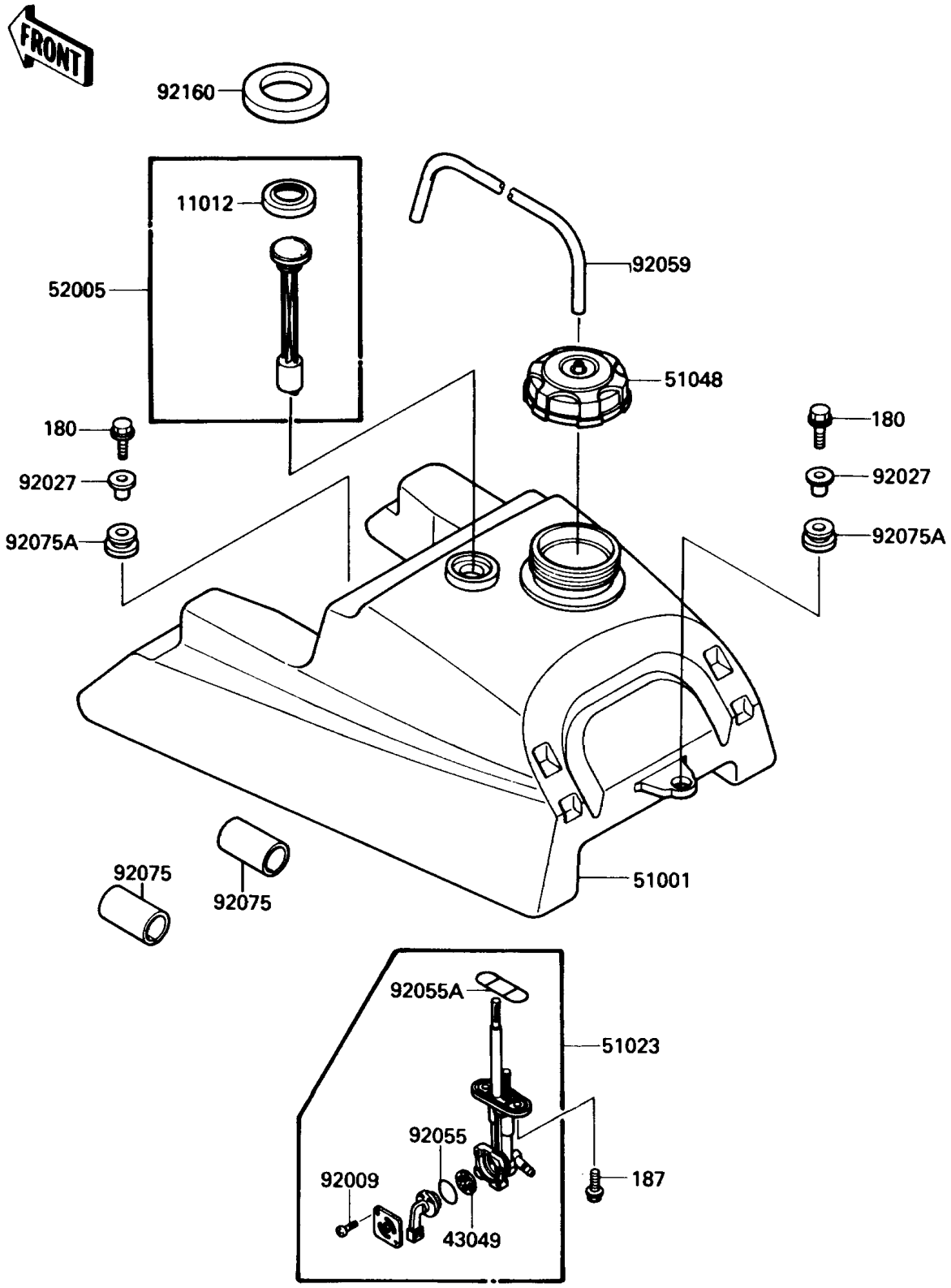

© 2025 Kawasaki Motors Corp., U.S.A.

1991 Bayou 220 PARTS LIST

Fuel Tank

ITEM NAME	PART NUMBER	QUANTITY
BOLT-UPSET-WS,6X25 (Ref # 180)	180D0625	3
BOLT-UPSET-WSP (Ref # 187)	187B0614	2
CAP,FUEL GAUGE (Ref # 11012)	11012-1627	1
PACKING,FUEL TAP LEVER (Ref # 43049)	43049-1017	1
TANK-COMP-FUEL (Ref # 51001)	51001-1272	1
TAP-ASSY,FUEL (Ref # 51023)	51023-1141	1
CAP-ASSY-TANK,FUEL (Ref # 51048)	51048-1090	1
GAUGE,FUEL (Ref # 52005)	52005-1086	1
SCREW,3X5 (Ref # 92009)	92009-1123	2
COLLAR,L=16.1 (Ref # 92027)	92027-1847	3
RING-O,FUEL TAP LEVER (Ref # 92055)	92055-1111	1
RING-O,FUEL TAP PACKING (Ref # 92055A)	92055-1348	1
TUBE,5X9.4X250 (Ref # 92059)	92059-1967	1
DAMPER,FUEL TANK,FR,UNDER (Ref # 92075)	92075-1369	2
DAMPER (Ref # 92075A)	92075-1787	3
DAMPER,42.5X70X8.5 (Ref # 92160)	92075-1988	1

© 2025 Kawasaki Motors Corp., U.S.A.