1991 Bayou 220 PARTS DIAGRAM

Ignition Coil

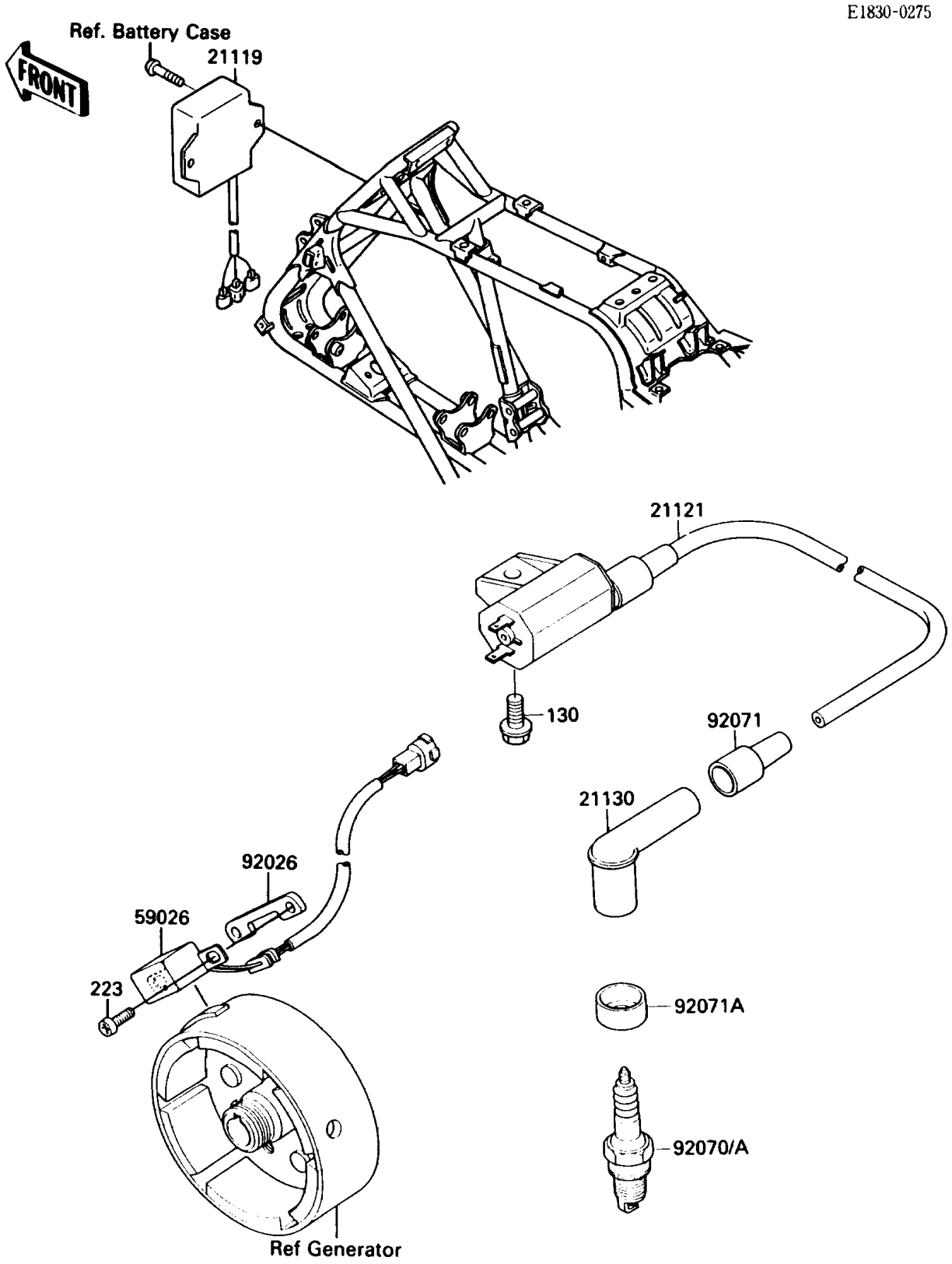

© 2025 Kawasaki Motors Corp., U.S.A.

1991 Bayou 220 PARTS LIST

Ignition Coil

ITEM NAME	PART NUMBER	QUANTITY
BOLT-FLANGED (Ref # 130)	130D0616	1
SCREW-PAN-WS-CROS (Ref # 223)	223B0516	2
IGNITER (Ref # 21119)	21119-1226	1
COIL-IGNITION (Ref # 21121)	21121-1160	1
CAP-SPARK PLUG (Ref # 21130)	21130-1003	1
COIL-PULSING (Ref # 59026)	59026-1088	1
SPACER (Ref # 92026)	92026-1292	1
GROMMET,HIGH TENSION (Ref # 92071)	21132-005	1
GROMMET,SPARK PLUG CAP (Ref # 92071A)	92071-1015	1
PLUG-SPARK,D8EA(NGK) (Ref # 92070)	92070-1011	1
PLUG-SPARK,DR8ES(NGK) (Ref # 92070A)	92070-1019	1

© 2025 Kawasaki Motors Corp., U.S.A.