1991 Bayou 220 PARTS DIAGRAM

Engine Cover

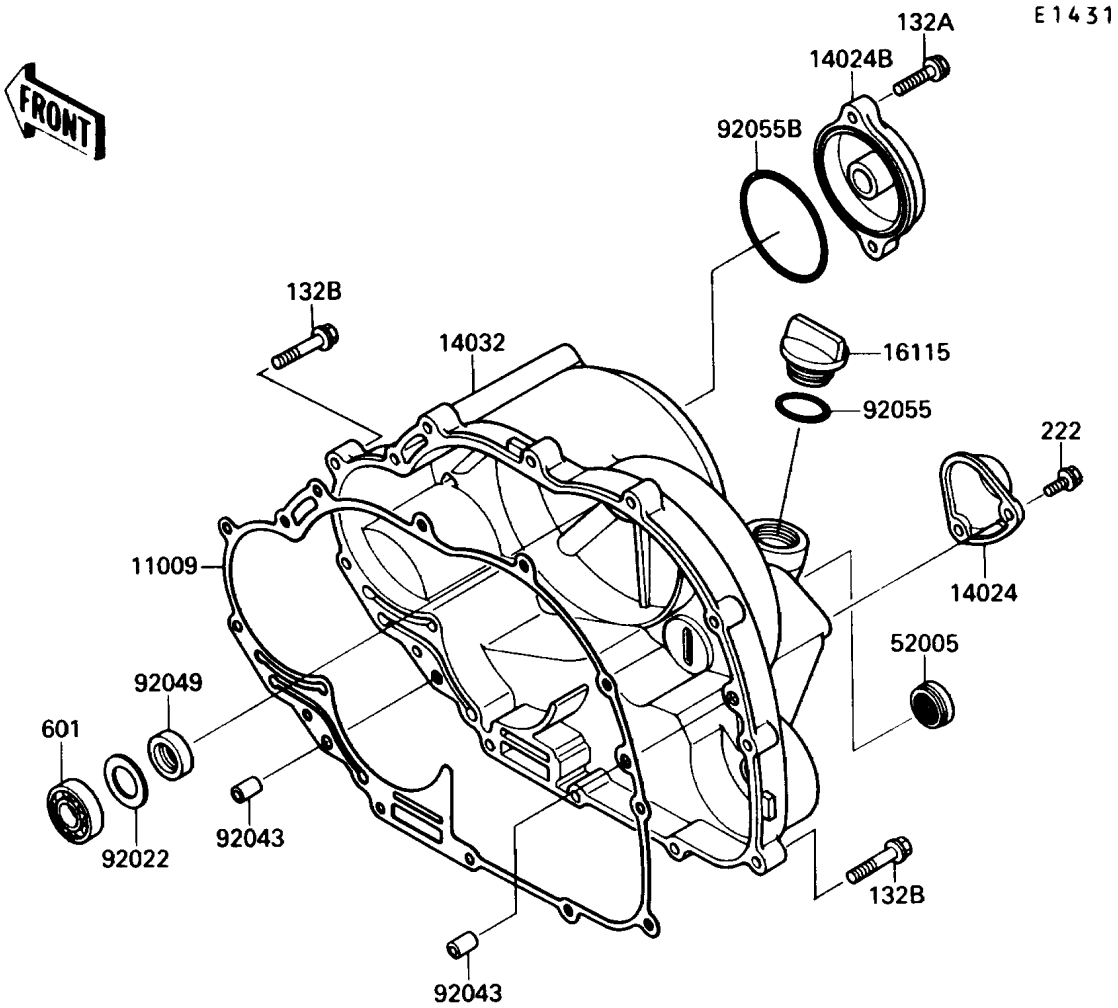

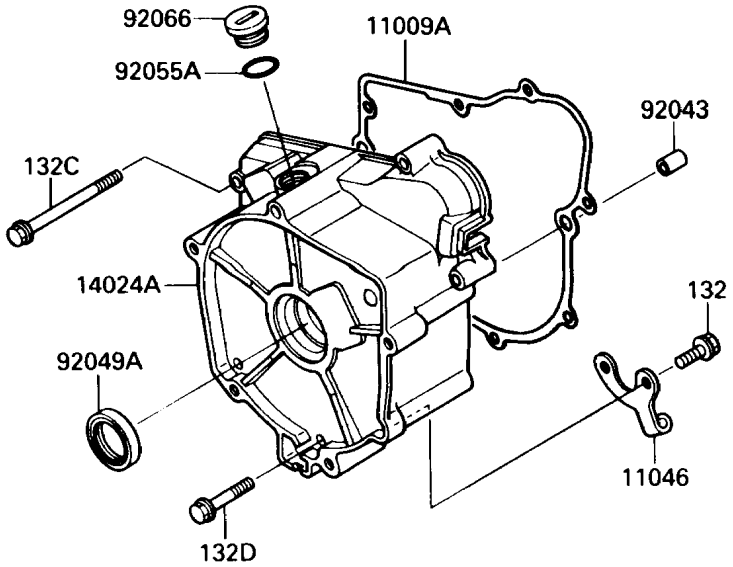

© 2025 Kawasaki Motors Corp., U.S.A.

1991 Bayou 220 PARTS LIST

Engine Cover

ITEM NAME	PART NUMBER	QUANTITY
BOLT-FLANGED-SMALL (Ref # 132)	132J0614	2
BOLT-FLANGED-SMALL (Ref # 132A)	132J0625	2
BOLT-FLANGED-SMALL (Ref # 132B)	132J0630	13
BOLT-FLANGED-SMALL (Ref # 132C)	132J0635	4
BOLT-FLANGED-SMALL (Ref # 132D)	132J0670	3
SCREW-CSK-RD-CROS (Ref # 222)	222C0512	2
BEARING-BALL (Ref # 601)	601A6002	1
GASKET,CLUTCH COVER (Ref # 11009)	11009-1671	1
GASKET,GENERATOR (Ref # 11009A)	11009-1672	1
BRACKET (Ref # 11046)	11045-1828	1
COVER (Ref # 14024)	14024-1486	1
COVER,GENERATOR (Ref # 14024A)	14024-1487	1
COVER,OIL FILTER (Ref # 14024B)	14024-1488	1
COVER-CLUTCH (Ref # 14032)	14032-1236	1
CAP-OIL FILLER (Ref # 16115)	16115-1009	1
GAUGE,OIL LEVEL (Ref # 52005)	52005-1009	1
WASHER,21X31.5X1.0 (Ref # 92022)	92022-1624	1
PIN,6.2X8X14 (Ref # 92043)	92043-1263	4
SEAL-OIL (Ref # 92049)	92049-1293	1
SEAL-OIL,TC25356 (Ref # 92049A)	92049-1317	1
RING-O,31.5X2.6 (Ref # 92055)	92055-049	1
RING-O (Ref # 92055A)	92055-1146	1
RING-O,63.6X2.4 (Ref # 92055B)	92055-1433	1
PLUG,COVER (Ref # 92066)	92066-1163	1

© 2025 Kawasaki Motors Corp., U.S.A.