1986 Bayou 185 PARTS DIAGRAM

Rear Hub

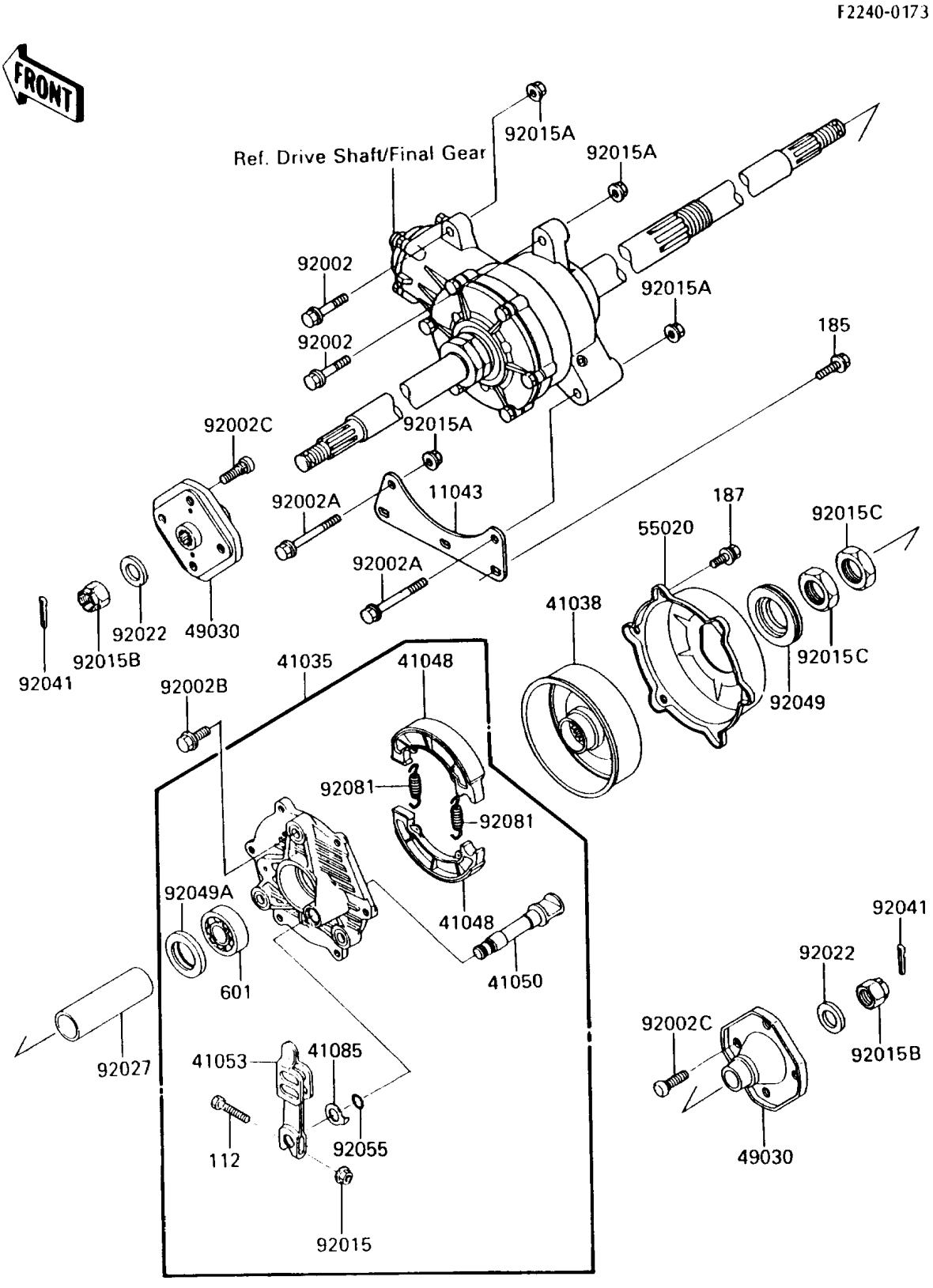

© 2024 Kawasaki Motors Corp., U.S.A.

1986 Bayou 185 PARTS LIST

Rear Hub

ITEM NAME	PART NUMBER	QUANTITY
BRACKET (Ref # 11043)	11043-1550	1
PANEL-ASSY-BRAKE,RR (Ref # 41035)	41035-1246	1
DRUM,RR BRAKE (Ref # 41038)	41038-1163	1
SHOE-BRAKE (Ref # 41048)	41048-1058	2
CAM-BRAKE (Ref # 41050)	41050-1062	1
LEVER-BRAKE CAM (Ref # 41053)	41053-1056	1
INDICATOR (Ref # 41085)	41085-1053	1
HUB,RR (Ref # 49030)	49030-1076	2
GUARD,RR BRAKE DRUM (Ref # 55020)	55020-1175	1
BOLT,FLANGED,10X38 (Ref # 92002)	92002-1313	2
BOLT,FLANGED,10X70 (Ref # 92002A)	92002-1315	2
BOLT,FLANGED,10X20 (Ref # 92002B)	92002-1368	3
BOLT,10MM (Ref # 92002C)	92002-1459	8
NUT,6MM (Ref # 92015)	41072-007	1
NUT,FLANGED,10MM (Ref # 92015A)	92015-1366	4
NUT,CASTLE,18MM (Ref # 92015B)	92015-1441	2
NUT,LOCK,32MM (Ref # 92015C)	92015-1493	2
WASHER,18.3X34X4.5 (Ref # 92022)	92022-1658	2
COLLAR,RR HUB,L=124.5 (Ref # 92027)	92027-1758	1
COTTER,4.0X35 (Ref # 92041)	92041-1053	2
SEAL-OIL,RR BRAKE DRUM (Ref # 92049)	92049-1194	1
SEAL-OIL,REAR HUB (Ref # 92049A)	92049-4001	1
RING-O,16.8X2.4 (Ref # 92055)	92055-1258	1
SPRING,BRAKE SHOE (Ref # 92081)	42020-004	2
BOLT-UPSET (Ref # 112)	112H0640	1
BOLT-UPSET-WSP-SMALL (Ref # 185)	185H0818	3
BOLT-UPSET-WSP (Ref # 187)	187D0614	6
BEARING-BALL,#6007UU (Ref # 601)	601A6007UU	1

© 2024 Kawasaki Motors Corp., U.S.A.