1986 Bayou 185 PARTS DIAGRAM

Battery Case

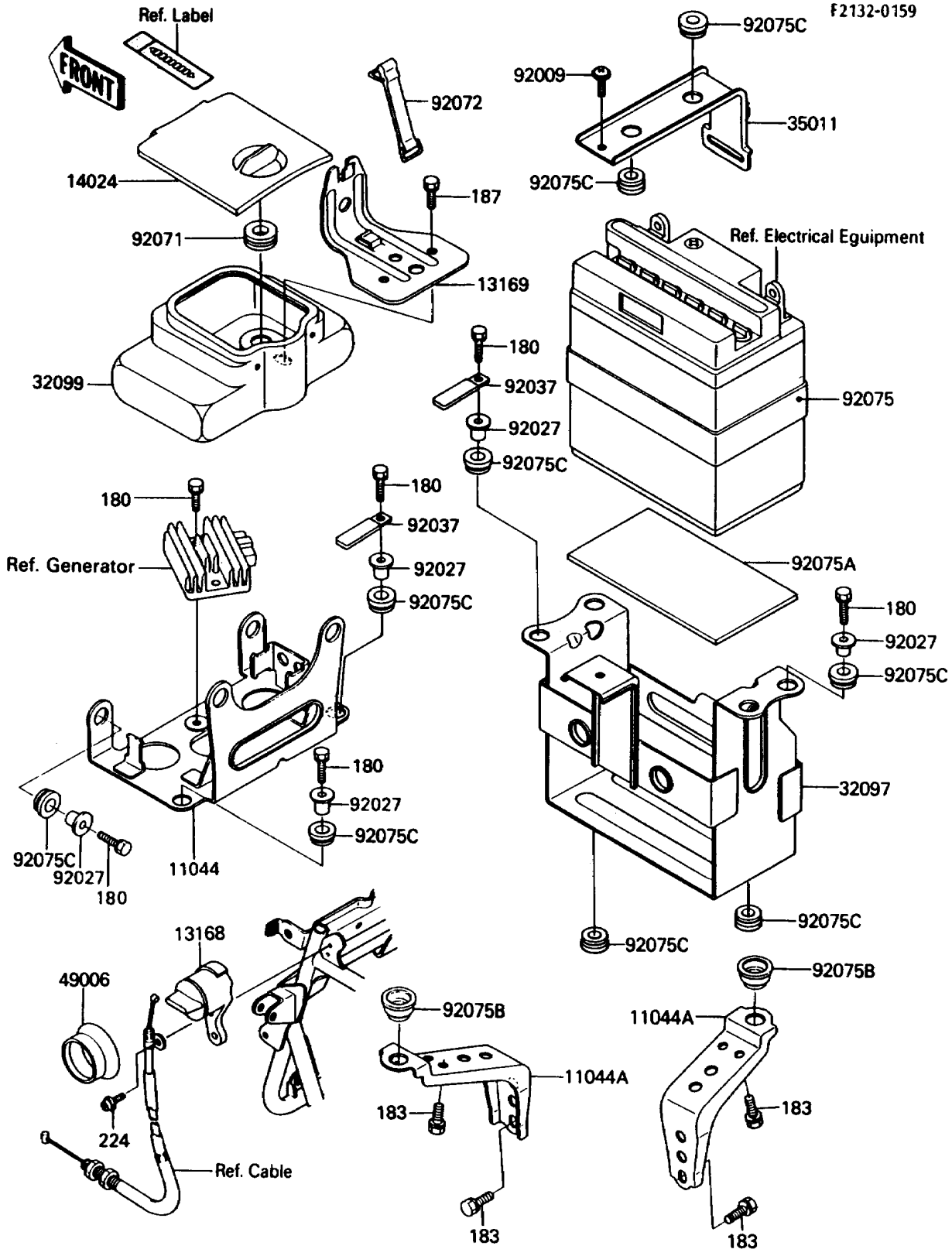

© 2024 Kawasaki Motors Corp., U.S.A.

1986 Bayou 185 PARTS LIST

Battery Case

ITEM NAME	PART NUMBER	QUANTITY
BRACKET,ELECTRIC (Ref # 11044)	11043-1836	1
BRACKET,CARRIER (Ref # 11044A)	11044-1227	2
LEVER,REVERSE (Ref # 13168)	13168-1274	1
PLATE,TOOL CASE (Ref # 13169)	13169-1945	1
COVER,TOOL CASE,BLACK (Ref # 14024)	14025-1941-6Z	1
CASE-BATTERY (Ref # 32097)	32097-1123	1
CASE,TOOL (Ref # 32099)	32099-1065	1
STAY,BATTERY (Ref # 35011)	35011-1280	1
BOOT (Ref # 49006)	49006-1185	1
SCREW,6X14 (Ref # 92009)	92009-1288	1
COLLAR,L=11.1 (Ref # 92027)	92027-194	8
CLAMP,WIRING HARNESS (Ref # 92037)	92037-1069	2
GROMMET (Ref # 92071)	92071-056	1
BAND (Ref # 92072)	92072-1085	1
DAMPER,BATTERY BOTTOM (Ref # 92075)	32103-023	1
DAMPER,BATTERY CASE (Ref # 92075A)	92075-1695	1
DAMPER (Ref # 92075B)	92075-1775	2
DAMPER (Ref # 92075C)	92075-277	12
BOLT-UPSET-WS (Ref # 180)	180D0620	10
BOLT-UPSET-WS-SMALL (Ref # 183)	183J0814	6
BOLT-UPSET-WSP (Ref # 187)	187C0614	2
SCREW-PAN-WP-CROS,5X20 (Ref # 224)	224B0520	2

© 2024 Kawasaki Motors Corp., U.S.A.