1987 Bayou 185 PARTS DIAGRAM

Air Cleaner

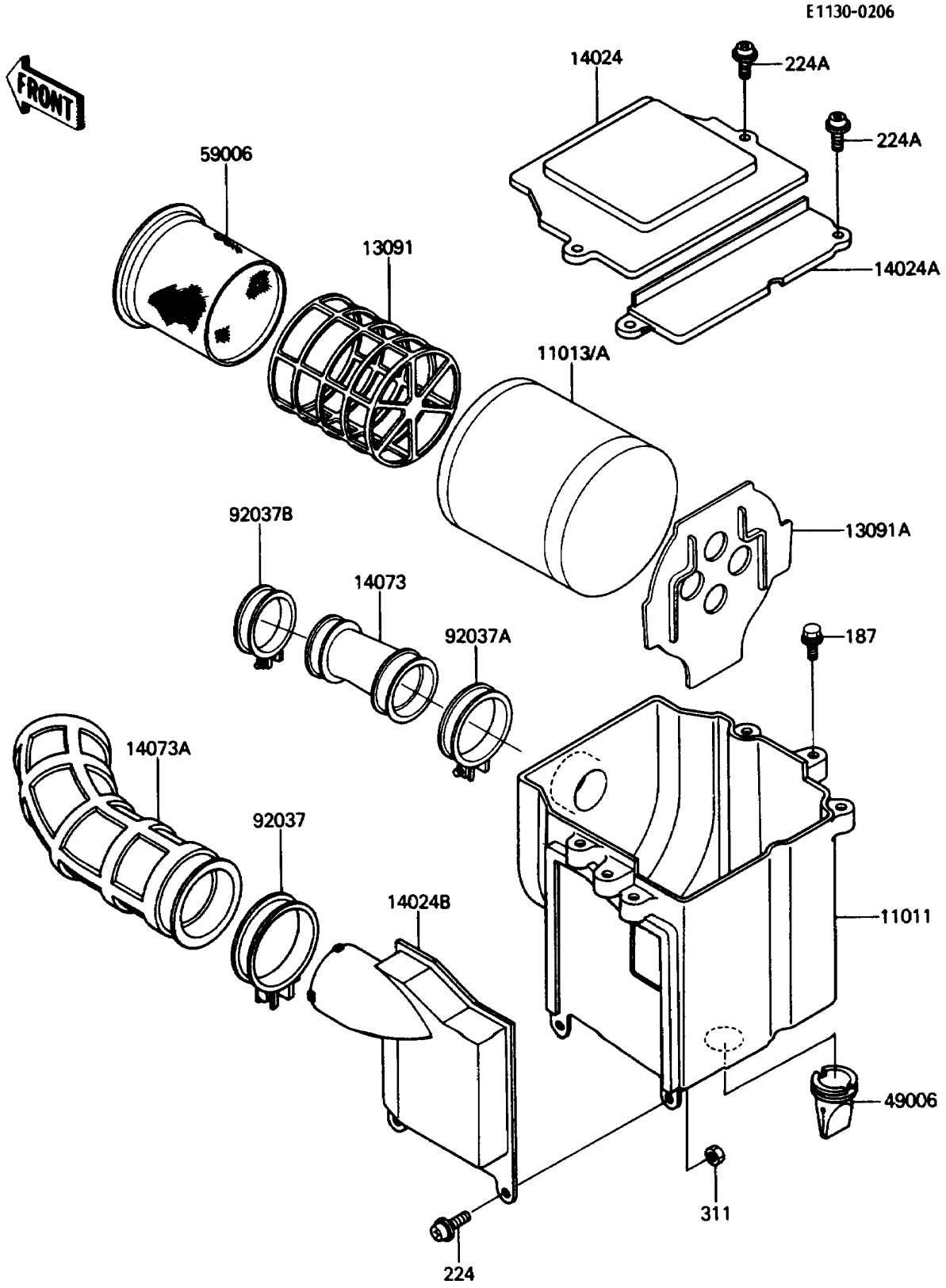

© 2024 Kawasaki Motors Corp., U.S.A.

1987 Bayou 185 PARTS LIST

Air Cleaner

ITEM NAME	PART NUMBER	QUANTITY
CASE-AIR FILTER (Ref # 11011)	11011-1211	1
ELEMENT-AIR FILTER (Ref # 11013A)	11013-1130	1
HOLDER,ELEMENT (Ref # 13091)	13091-1121	1
HOLDER,ELEMENT (Ref # 13091A)	13091-1125	1
COVER,AIR FILTER,FR (Ref # 14024)	14024-1147	1
COVER,AIR FILTER,RR (Ref # 14024A)	14024-1148	1
COVER,AIR FILTER,SIDE (Ref # 14024B)	14024-1149	1
DUCT,CARBURETOR (Ref # 14073)	14073-1206	1
DUCT,INTAKE (Ref # 14073A)	14073-1240	1
BOOT,AIR FILTER (Ref # 49006)	49006-1065	1
ARRESTER-FLAME (Ref # 59006)	59006-1051	1
CLAMP (Ref # 92037)	92037-1523	1
CLAMP (Ref # 92037A)	92037-177	1
CLAMP,CONNECTOR (Ref # 92037B)	92037-200	1
BOLT-UPSET-WSP (Ref # 187)	187B0616	2
SCREW-PAN-WP-CROS (Ref # 224)	224B0614	2
SCREW-PAN-WP-CROS (Ref # 224A)	224B0618	4
NUT-HEX,6MM (Ref # 311)	311B0600	2

© 2024 Kawasaki Motors Corp., U.S.A.