2003 KLR650 PARTS DIAGRAM

Handlebar

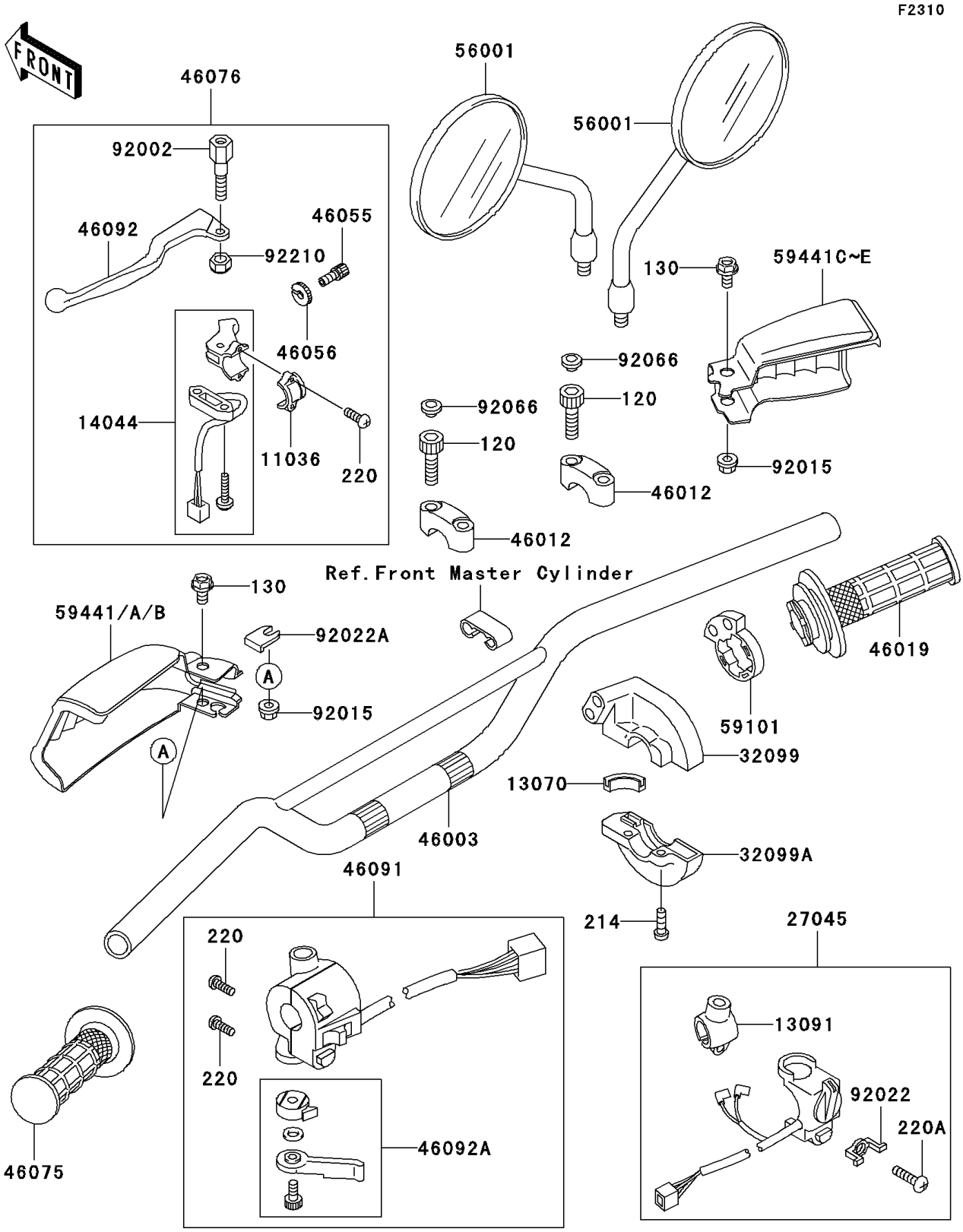

© 2025 Kawasaki Motors Corp., U.S.A.

2003 KLR650 PARTS LIST

Handlebar

ITEM NAME	PART NUMBER	QUANTITY
BOLT-SOCKET,8X30,BLACK (Ref # 120)	120S0830	4
BOLT-FLANGED (Ref # 130)	130J0612	2
SCREW-PAN+- (Ref # 214)	214C0518	2
SCREW-PAN-CROSS (Ref # 220)	220F0514	4
SCREW-PAN-CROSS (Ref # 220A)	220F0620	1
BRACKET-A,LEVER HOLDER (Ref # 11036)	11036-1297	1
GUIDE,THROTTLE PEACE (Ref # 13070)	13070-1131	1
HOLDER,ENGINE STOP SWITCH (Ref # 13091)	13091-1255	1
HOLDER-CABLE,CLUTCH (Ref # 14044)	14044-1062	1
SWITCH-ASSY,ENGINE STOP (Ref # 27045)	27045-1071	1
CASE,THROTTLE,UPP (Ref # 32099)	32099-1072	1
CASE,THROTTLE,LWR (Ref # 32099A)	32099-1073	1
HANDLE (Ref # 46003)	46003-1153	1
HOLDER-HANDLE,UPP (Ref # 46012)	46012-1102	2
GRIP-ASSY,THROTTLE (Ref # 46019)	46019-1054	1
SCREW,CABLE ADJUST,8MM (Ref # 46055)	46055-009	1
NUT,CABLE ADJUST (Ref # 46056)	46056-006	1
GRIP,LH (Ref # 46075)	46075-1051	1
LEVER-ASSY-GRIP,CLUTCH (Ref # 46076)	46076-1142	1
HOUSING-ASSY-CONTROL,LH (Ref # 46091)	46091-1791	1
LEVER-GRIP,CLUTCH (Ref # 46092)	46092-1111	1
LEVER-GRIP,CHOKE (Ref # 46092A)	46092-1123	1
MIRROR-ASSY (Ref # 56001)	56001-1204	2
REEL,THROTTLE (Ref # 59101)	59101-1106	1
COVER-HANDLE,LH,EBONY (Ref # 59441A)	59441-1073-6C	1
COVER-HANDLE,RH,EBONY (Ref # 59441D)	59441-1074-6C	1
BOLT,LEVER SET (Ref # 92002)	92002-1880	1
NUT,LOCK,FLANGED,6MM (Ref # 92015)	92015-1603	2
WASHER,ENGINE STOP SWITCH (Ref # 92022)	92022-1474	1

© 2025 Kawasaki Motors Corp., U.S.A.

2003 KLR650 PARTS LIST

Handlebar

ITEM NAME	PART NUMBER	QUANTITY
WASHER (Ref # 92022A)	92022-1896	1
PLUG (Ref # 92066)	92066-1216	4
NUT,LOCK,6MM (Ref # 92210)	92210-0006	1

© 2025 Kawasaki Motors Corp., U.S.A.