2003 KLR650 PARTS DIAGRAM

Water Pump

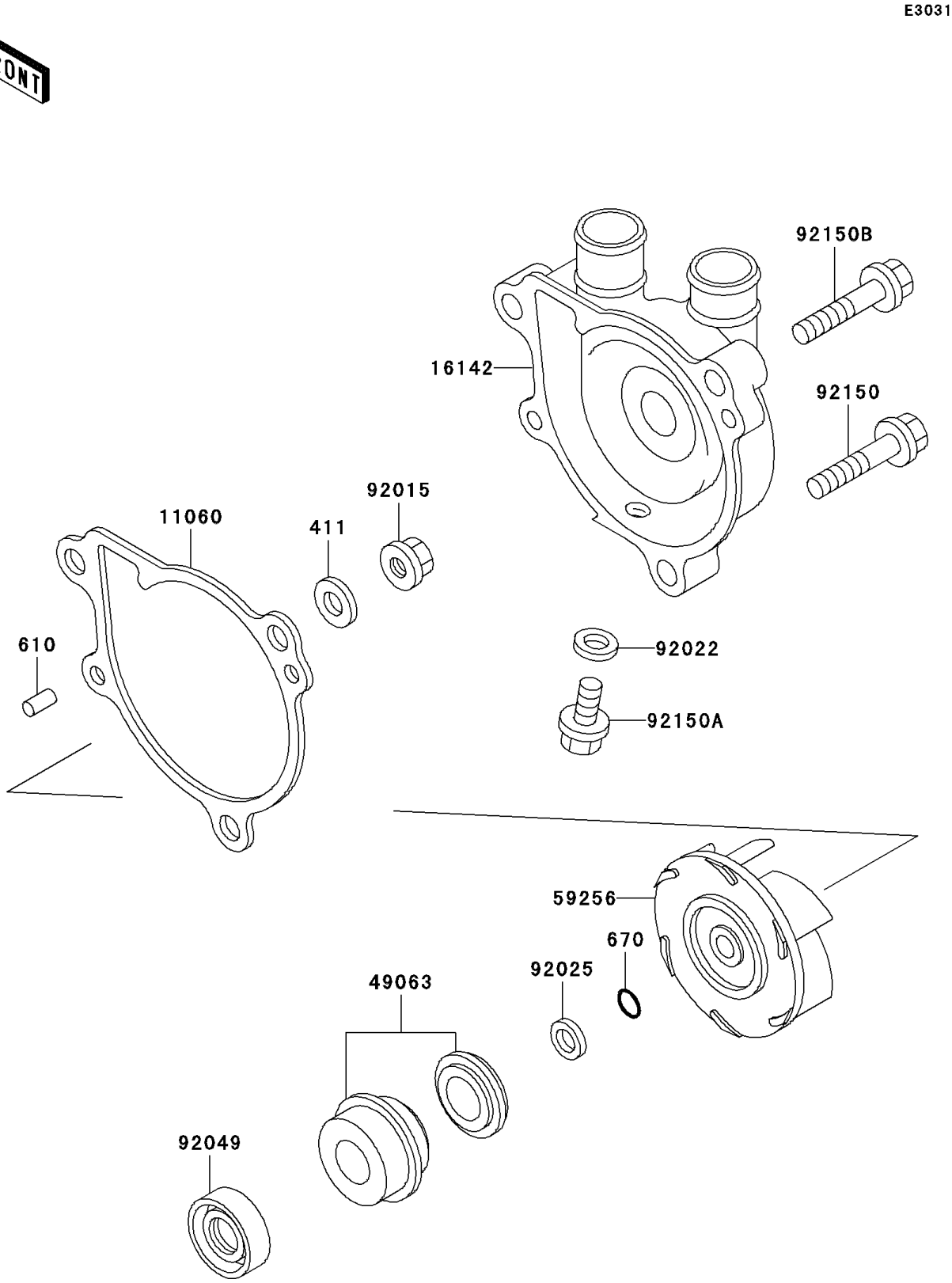

© 2025 Kawasaki Motors Corp., U.S.A.

2003 KLR650 PARTS LIST

Water Pump

ITEM NAME	PART NUMBER	QUANTITY
WASHER-PLAIN,6MM,BLACK (Ref # 411)	411F0600	1
ROLLER,4X8 (Ref # 610)	610A0408	2
O RING,6MM (Ref # 670)	670B1506	1
GASKET,WATER PUMP COVER (Ref # 11060)	11060-1114	1
COVER-PUMP (Ref # 16142)	16142-1097	1
SEAL-MECHANICAL (Ref # 49063)	49063-1056	1
IMPELLER (Ref # 59256)	59256-1055	1
NUT,FLANGED,6MM (Ref # 92015)	92015-1078	1
WASHER,6.2X11X1 (Ref # 92022)	92022-304	1
SHIM,T=0.8 (Ref # 92025)	92025-1503	1
SEAL-OIL,SC10227 (Ref # 92049)	92049-1157	1
BOLT,6X30 (Ref # 92150)	92150-1021	2
BOLT,6X8 (Ref # 92150A)	92150-1966	1
BOLT,6X35 (Ref # 92150B)	92150-1967	1

© 2025 Kawasaki Motors Corp., U.S.A.