2003 KLR650 PARTS DIAGRAM

Air Cleaner

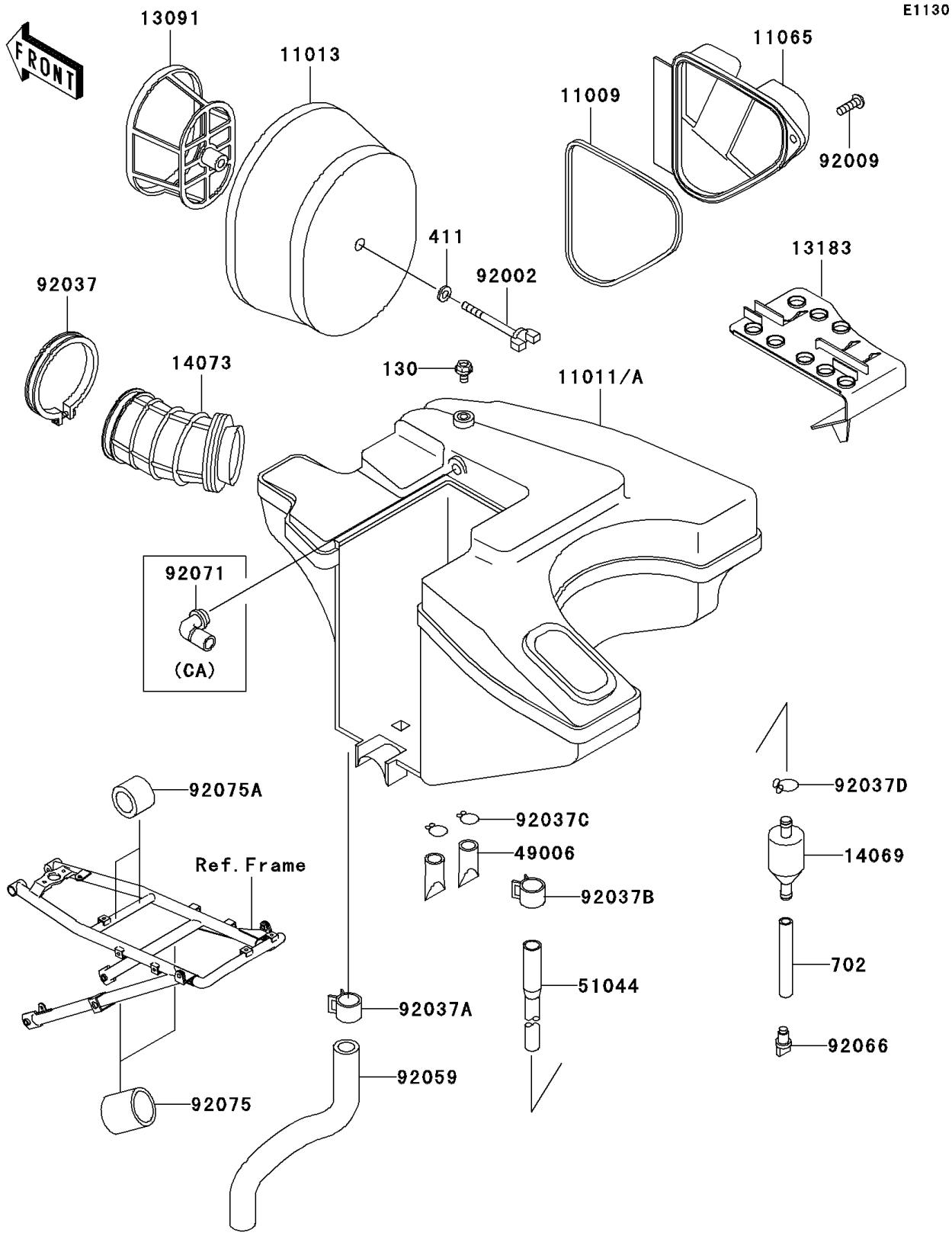

© 2025 Kawasaki Motors Corp., U.S.A.

2003 KLR650 PARTS LIST

Air Cleaner

ITEM NAME	PART NUMBER	QUANTITY
BOLT-FLANGED,6X10 (Ref # 130)	130G0610	1
WASHER-PLAIN,6MM (Ref # 411)	411E0600	1
TUBE-RUBBER,7X10X70 (Ref # 702)	702A0770	1
GASKET (Ref # 11009)	11009-1649	1
ELEMENT-AIR FILTER (Ref # 11013)	11013-1152	1
CAP,AIR FILTER (Ref # 11065)	11065-1133	1
HOLDER (Ref # 13091)	13091-1473	1
PLATE (Ref # 13183)	13183-1118	1
BREATHER (Ref # 14069)	14069-1051	1
DUCT (Ref # 14073)	14073-1288	1
BOOT (Ref # 49006)	49006-1211	2
TUBE-ASSY,AIR FILTER (Ref # 51044)	51044-1105	1
BOLT (Ref # 92002)	92002-1904	1
SCREW (Ref # 92009)	92009-1460	1
CLAMP (Ref # 92037)	92037-1859	1
CLAMP (Ref # 92037A)	92037-1860	1
CLAMP (Ref # 92037B)	92037-1861	1
CLAMP,14.5MM (Ref # 92037C)	92037-1900	2
CLAMP,TUBE (Ref # 92037D)	92037-1972	1
TUBE (Ref # 92059)	92059-1774	1
PLUG,DRAIN (Ref # 92066)	92066-1211	1
DAMPER,25X31X30 (Ref # 92075)	92075-1906	2
DAMPER,18X27X20 (Ref # 92075A)	92075-1907	2
CASE-AIR FILTER (Ref # 11011)	11011-1457	1
CASE-AIR FILTER (Ref # 11011A)	11011-1458	1
GROMMET,AIR FILTER (Ref # 92071)	92071-1147	1

© 2025 Kawasaki Motors Corp., U.S.A.