1990 KLR250 PARTS DIAGRAM

Air Filter

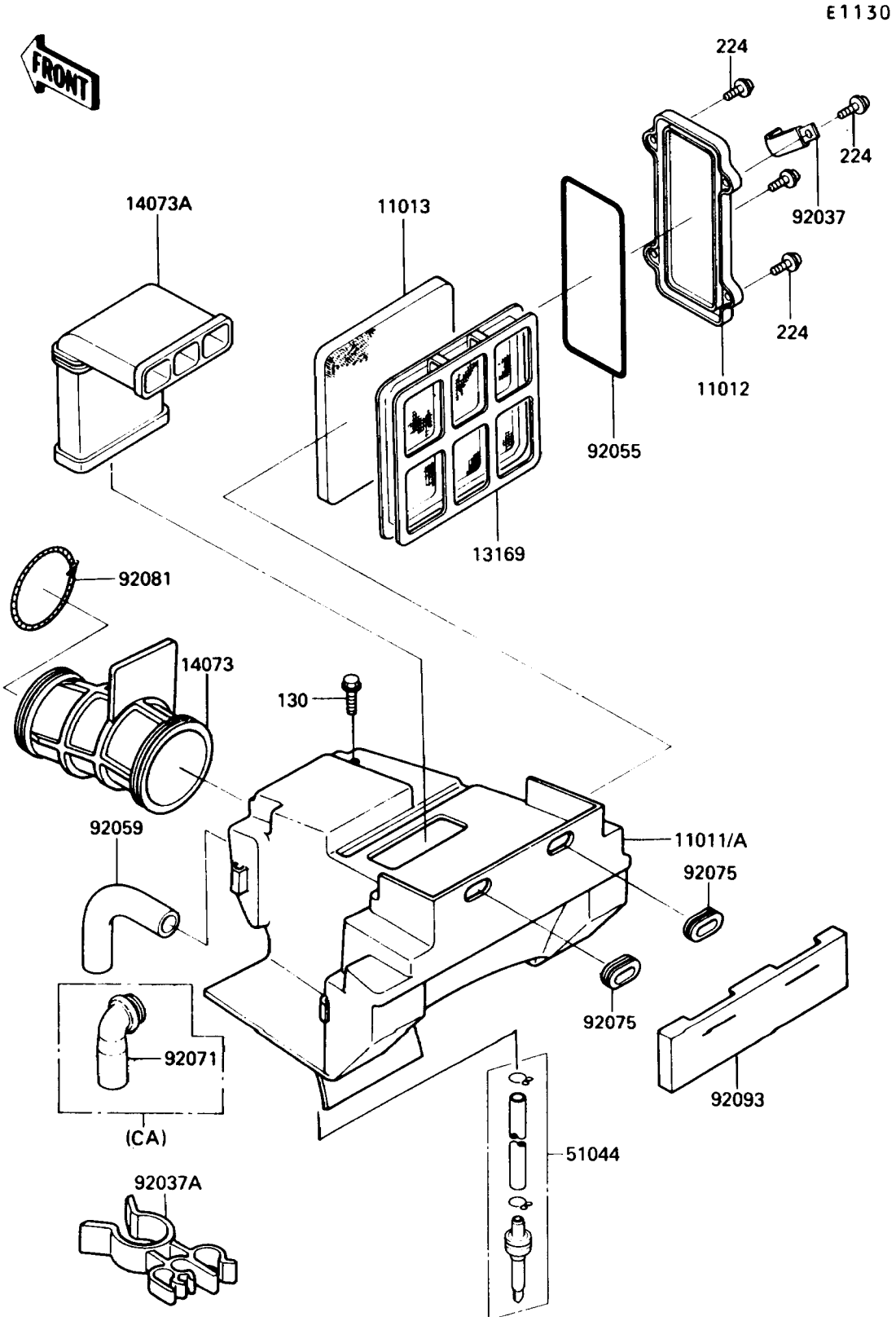

© 2024 Kawasaki Motors Corp., U.S.A.

1990 KLR250 PARTS LIST

Air Filter

ITEM NAME	PART NUMBER	QUANTITY
CASE-AIR FILTER (Ref # 11011)	11011-1275	1
CASE-AIR FILTER (Ref # 11011A)	11011-1276	1
CAP,ELEMENT (Ref # 11012)	11012-1661	1
ELEMENT-AIR FILTER (Ref # 11013)	11013-1117	1
PLATE,ELEMENT (Ref # 13169)	13169-1851	1
DUCT,CARBURETOR (Ref # 14073)	14073-1184	1
DUCT,INTAKE (Ref # 14073A)	14073-1185	1
TUBE-ASSY,AIR FILTER (Ref # 51044)	51044-1087	1
CLAMP,WIRING HARNESS (Ref # 92037)	92037-1069	1
CLAMP (Ref # 92037A)	92037-1886	1
RING-O,AIR FILTER (Ref # 92055)	92055-1254	1
TUBE,BREATHER (Ref # 92059)	92059-1482	1
GROMMET,AIR FILTER (Ref # 92071)	92071-1114	1
DAMPER (Ref # 92075)	92075-1513	2
SPRING,COIL (Ref # 92081)	92081-1177	1
SEAL (Ref # 92093)	92093-1187	1
BOLT-FLANGED,6X12 (Ref # 130)	130G0612	1
SCREW-PAN-WP-CROS (Ref # 224)	224C0614	4

© 2024 Kawasaki Motors Corp., U.S.A.