1989 KLR250 PARTS DIAGRAM

Gear Change Drum/Shift Fork(s)

E1362-0092

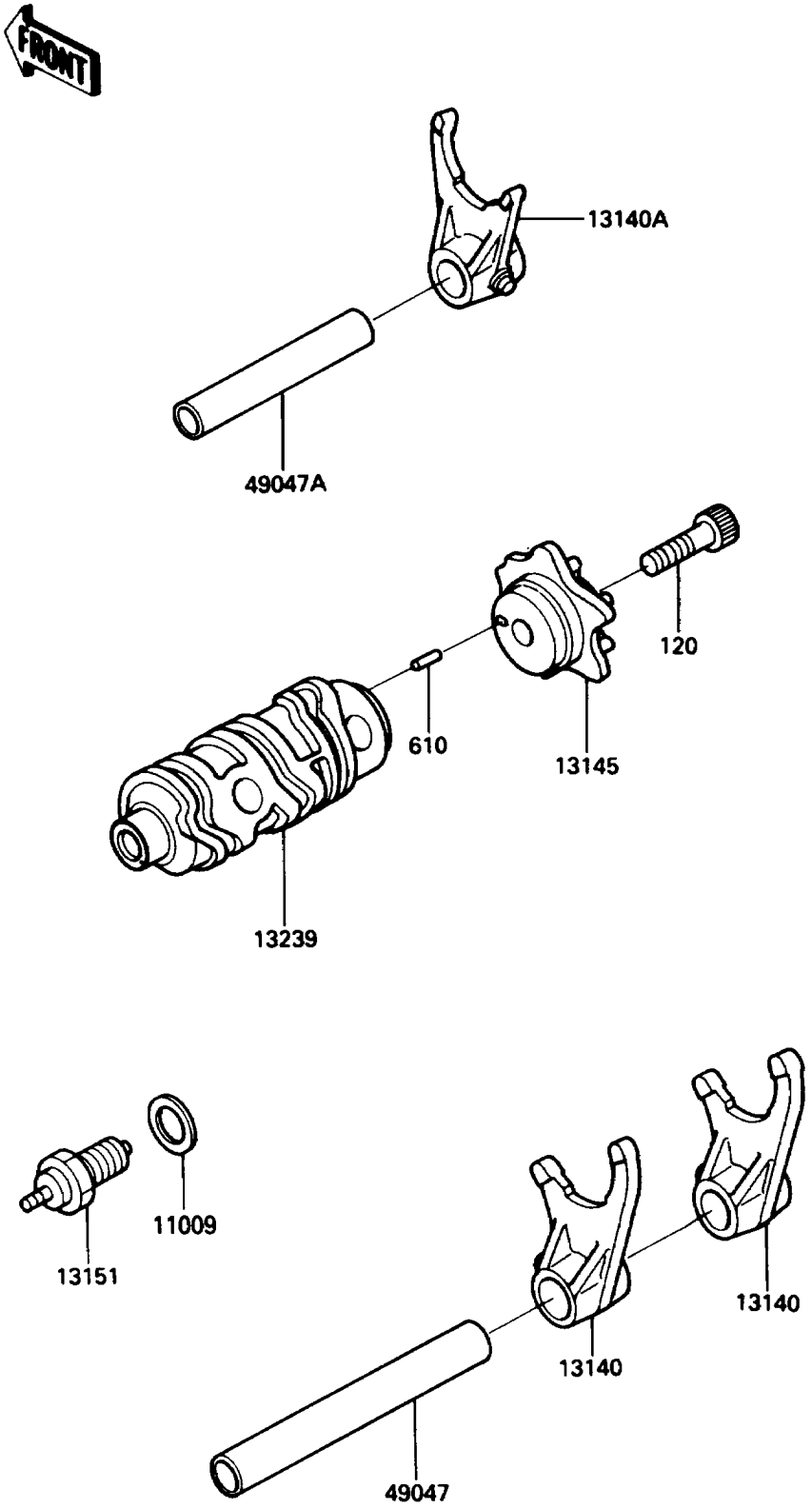

© 2024 Kawasaki Motors Corp., U.S.A.

1989 KLR250 PARTS LIST

Gear Change Drum/Shift Fork(s)

ITEM NAME	PART NUMBER	QUANTITY
GASKET,10.5X16X1,DRAIN PLUG (Ref # 11009)	92065-058	1
FORK-SHIFT (Ref # 13140)	13140-1116	2
FORK-SHIFT (Ref # 13140A)	13140-1117	1
CAM-CHANGE DRUM (Ref # 13145)	13145-1054	1
SWITCH-COMP,NEUTRAL (Ref # 13151)	13151-1007	1
DRUM-ASSY-CHANGE (Ref # 13239)	13239-1113	1
ROD-SHIFT,L=106.7 (Ref # 49047)	49047-1056	1
ROD-SHIFT,L=71.7 (Ref # 49047A)	49047-1057	1
BOLT-SOCKET,6X25 (Ref # 120)	120P0625	1
ROLLER,4X10 (Ref # 610)	610A0410	1

© 2024 Kawasaki Motors Corp., U.S.A.