2017 MULE PRO-FXT™ EPS LE PARTS DIAGRAM

Shock Absorber(s)

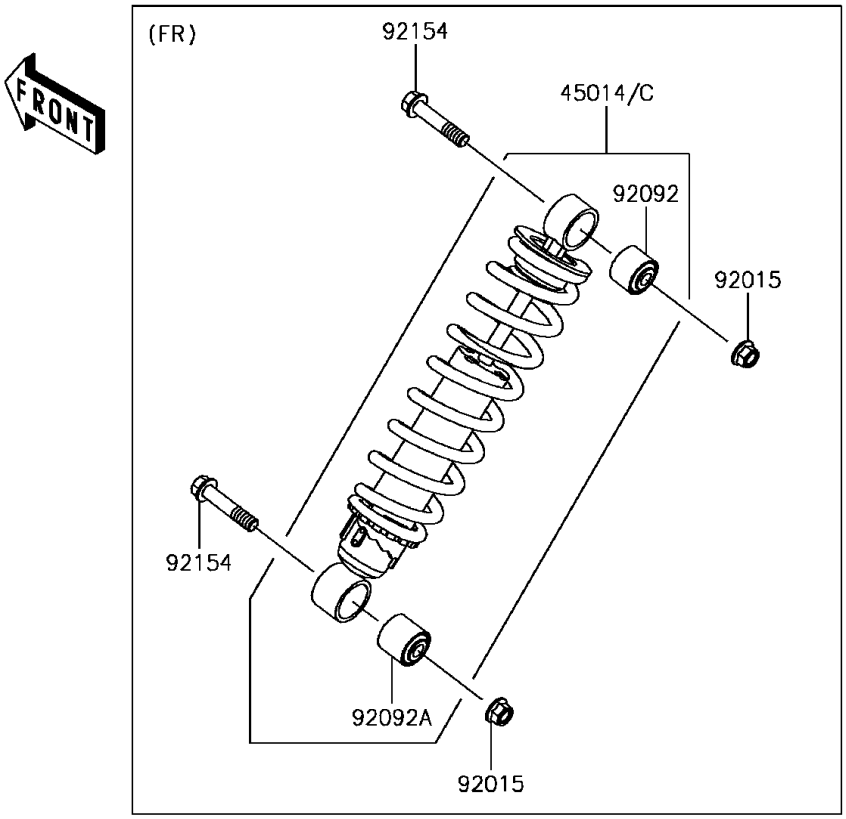

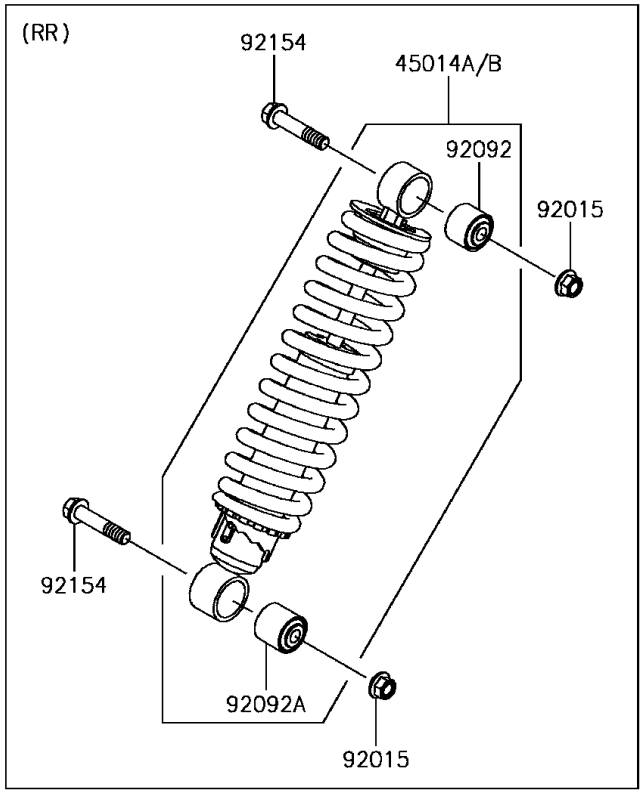

© 2024 Kawasaki Motors Corp., U.S.A.

2017 MULE PRO-FXT™ EPS LE PARTS LIST

Shock Absorber(s)

ITEM NAME	PART NUMBER	QUANTITY

© 2024 Kawasaki Motors Corp., U.S.A.