2015 KLR™650 PARTS DIAGRAM

Stand(s)

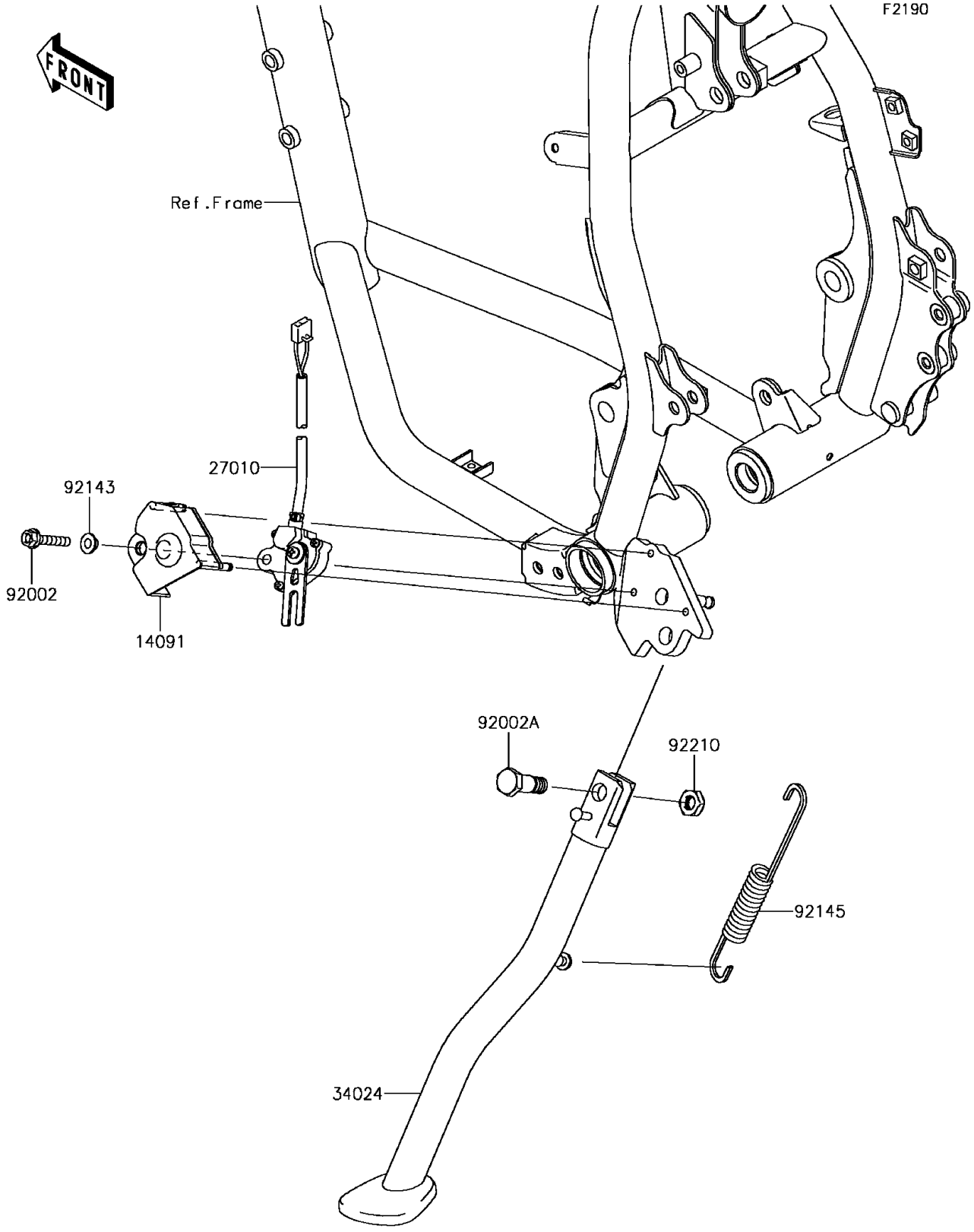

© 2024 Kawasaki Motors Corp., U.S.A.

2015 KLR™650 PARTS LIST

Stand(s)

ITEM NAME	PART NUMBER	QUANTITY

© 2024 Kawasaki Motors Corp., U.S.A.