2015 KLR™650 PARTS DIAGRAM

Clutch

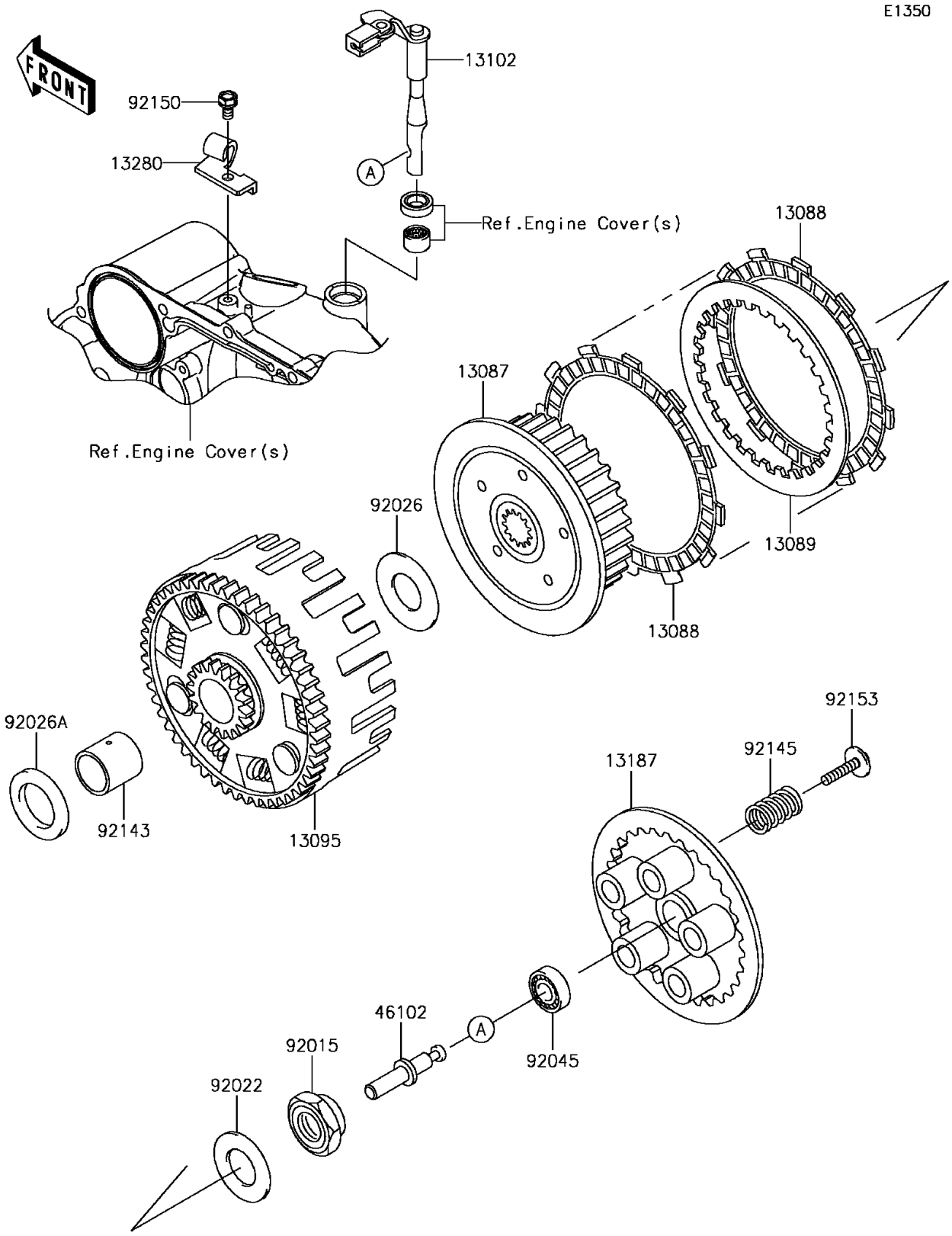

© 2026 Kawasaki Motors Corp., U.S.A.

2015 KLR™650 PARTS LIST

Clutch

ITEM NAME	PART NUMBER	QUANTITY

© 2026 Kawasaki Motors Corp., U.S.A.