2015 Vulcan 1700 Voyager ABS PARTS DIAGRAM

Oil Filter

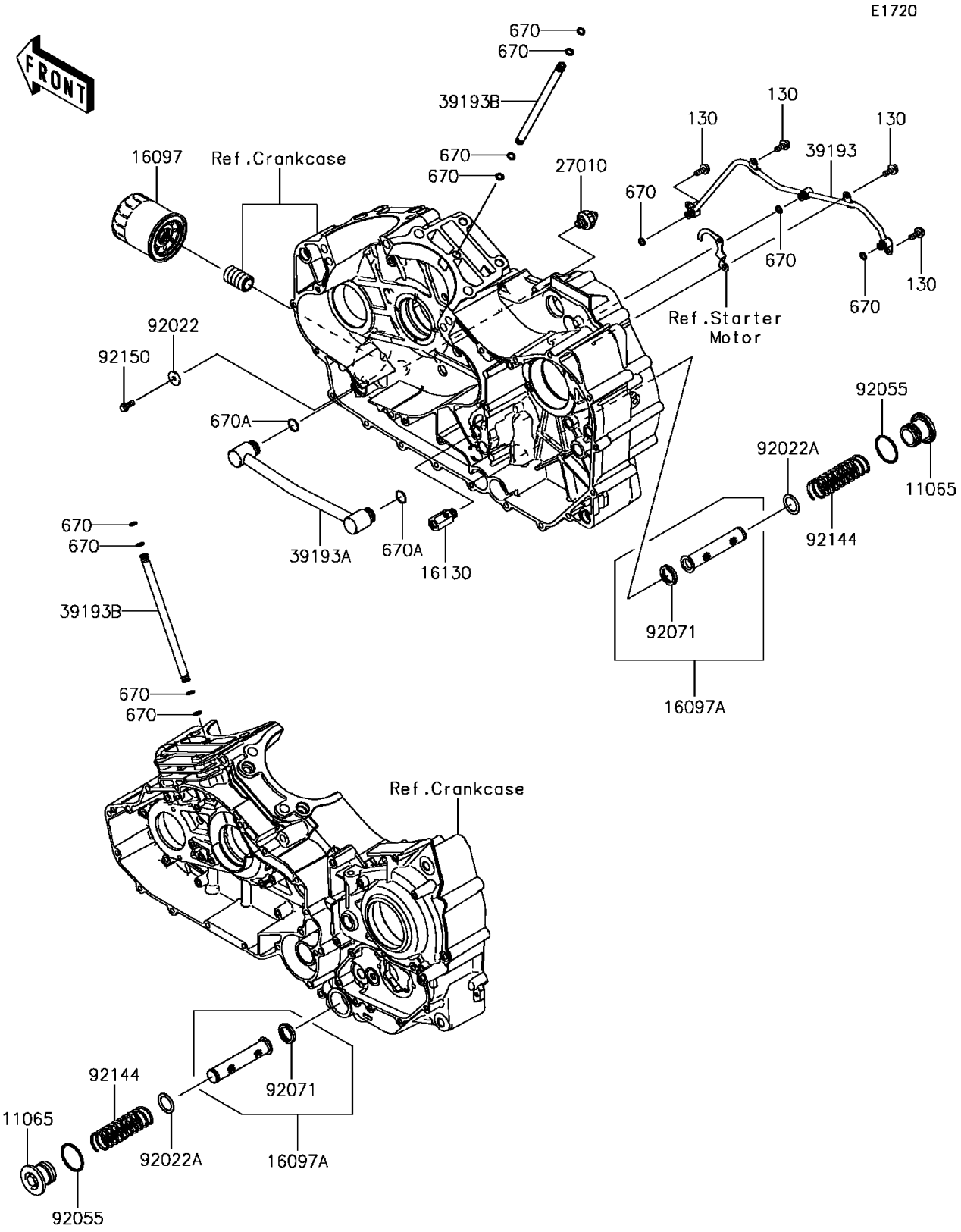

© 2026 Kawasaki Motors Corp., U.S.A.

2015 Vulcan 1700 Voyager ABS PARTS LIST

Oil Filter

ITEM NAME	PART NUMBER	QUANTITY

© 2026 Kawasaki Motors Corp., U.S.A.