1998 Lakota 300 PARTS DIAGRAM

Crankcase

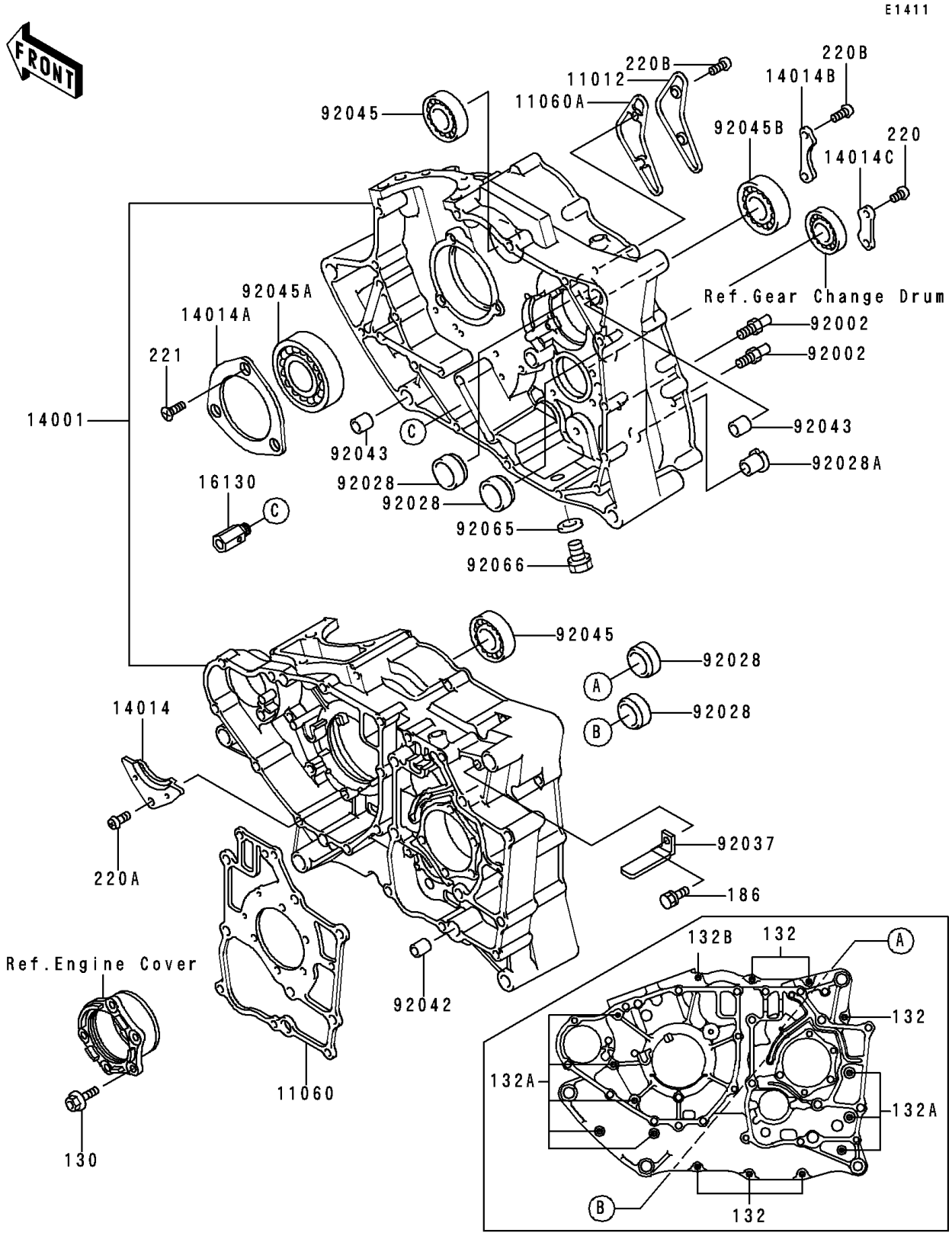

© 2024 Kawasaki Motors Corp., U.S.A.

1998 Lakota 300 PARTS LIST

Crankcase

ITEM NAME	PART NUMBER	QUANTITY
BOLT-FLANGED,6X20 (Ref # 130)	130P0620	5
BOLT-FLANGED-SMALL (Ref # 132)	132Y0635	6
BOLT-FLANGED-SMALL (Ref # 132A)	132Y0665	8
BOLT-FLANGED-SMALL (Ref # 132B)	132Y0685	1
BOLT-UPSET-WP (Ref # 186)	186D0614	1
SCREW-PAN-CROS,6X10 (Ref # 220)	220B0610	2
SCREW-PAN-CROS,6X12 (Ref # 220A)	220B0612	1
SCREW-PAN-CROS,6X14 (Ref # 220B)	220B0614	4
SCREW-CSK-CROS,6X16 (Ref # 221)	221B0616	3
CAP (Ref # 11012)	11012-1443	1
GASKET,GEAR CASE (Ref # 11060)	11060-1653	1
GASKET,OIL LINE CAP (Ref # 11060A)	11060-1654	1
SET-CRANKCASE (Ref # 14001)	14001-5324	1
PLATE-POSITION,CAM CHAIN (Ref # 14014)	14014-035	1
PLATE-POSITION,CRANK BEARING (Ref # 14014A)	14014-1004	1
PLATE-POSITION (Ref # 14014B)	14014-1069	1
PLATE-POSITION,CHANGE DRUM (Ref # 14014C)	14014-1070	1
VALVE-ASSY-RELIEF (Ref # 16130)	16130-1001	1
BOLT,RETURN SPRING (Ref # 92002)	92002-1408	2
BUSHING,23X30X13 (Ref # 92028)	92028-132	4
BUSHING (Ref # 92028A)	92028-1386	1
CLAMP,HARNESS (Ref # 92037)	92037-1316	1
PIN,DOWEL,12X14 (Ref # 92042)	92042-031	1
PIN,11.5X14X14 (Ref # 92043)	92043-1279	2
BEARING-BALL,6004TMB (Ref # 92045)	92045-1118	2
BEARING-BALL (Ref # 92045A)	92045-1172	1
BEARING-BALL (Ref # 92045B)	92045-1173	1
GASKET,12X22X2,DRAIN PLUG (Ref # 92065)	92065-097	1
PLUG,OIL DRAIN,12X15 (Ref # 92066)	92066-1174	1

© 2024 Kawasaki Motors Corp., U.S.A.