1988 KE100 PARTS DIAGRAM

Side Cover/Chain Case

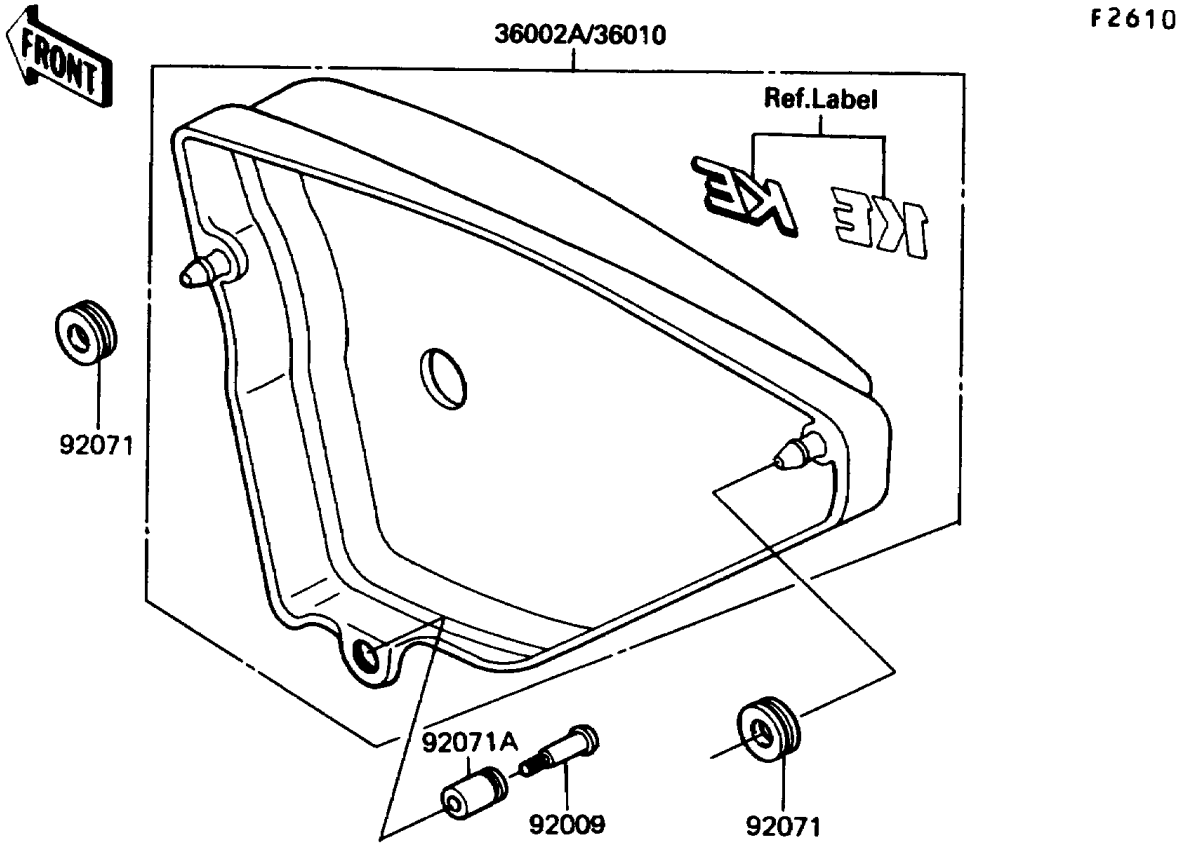

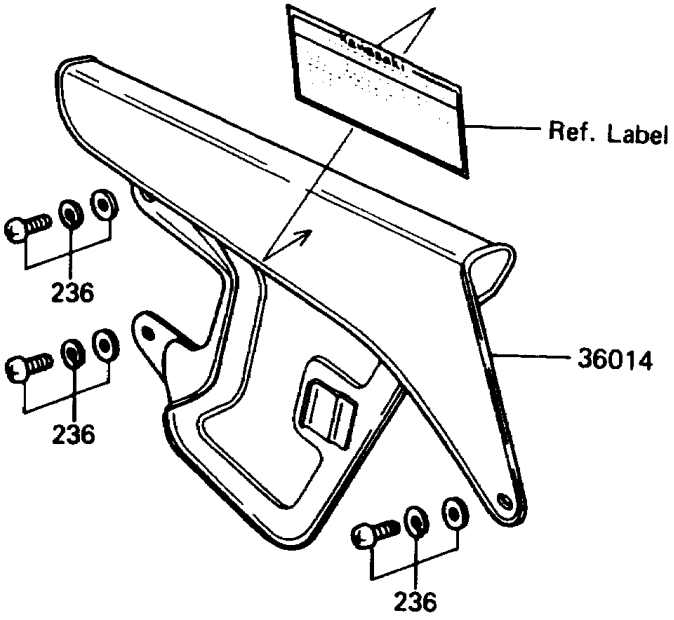

© 2024 Kawasaki Motors Corp., U.S.A.

1988 KE100 PARTS LIST

Side Cover/Chain Case

ITEM NAME	PART NUMBER	QUANTITY
COVER-SIDE,RH,P.WHITE (Ref # 36002A)	36002-5299-6F	1
CASE-CHAIN,BLACK (Ref # 36014)	36014-1047	1
SCREW,PLUG (Ref # 92009)	92009-1001	1
GROMMET (Ref # 92071)	92071-056	2
GROMMET,SIDE COVER (Ref # 92071A)	92071-1001	1
SCREW-PAN-WSP-CROS,6X12 (Ref # 236)	236C0612	3

© 2024 Kawasaki Motors Corp., U.S.A.