1988 KE100 PARTS DIAGRAM

Front Hub

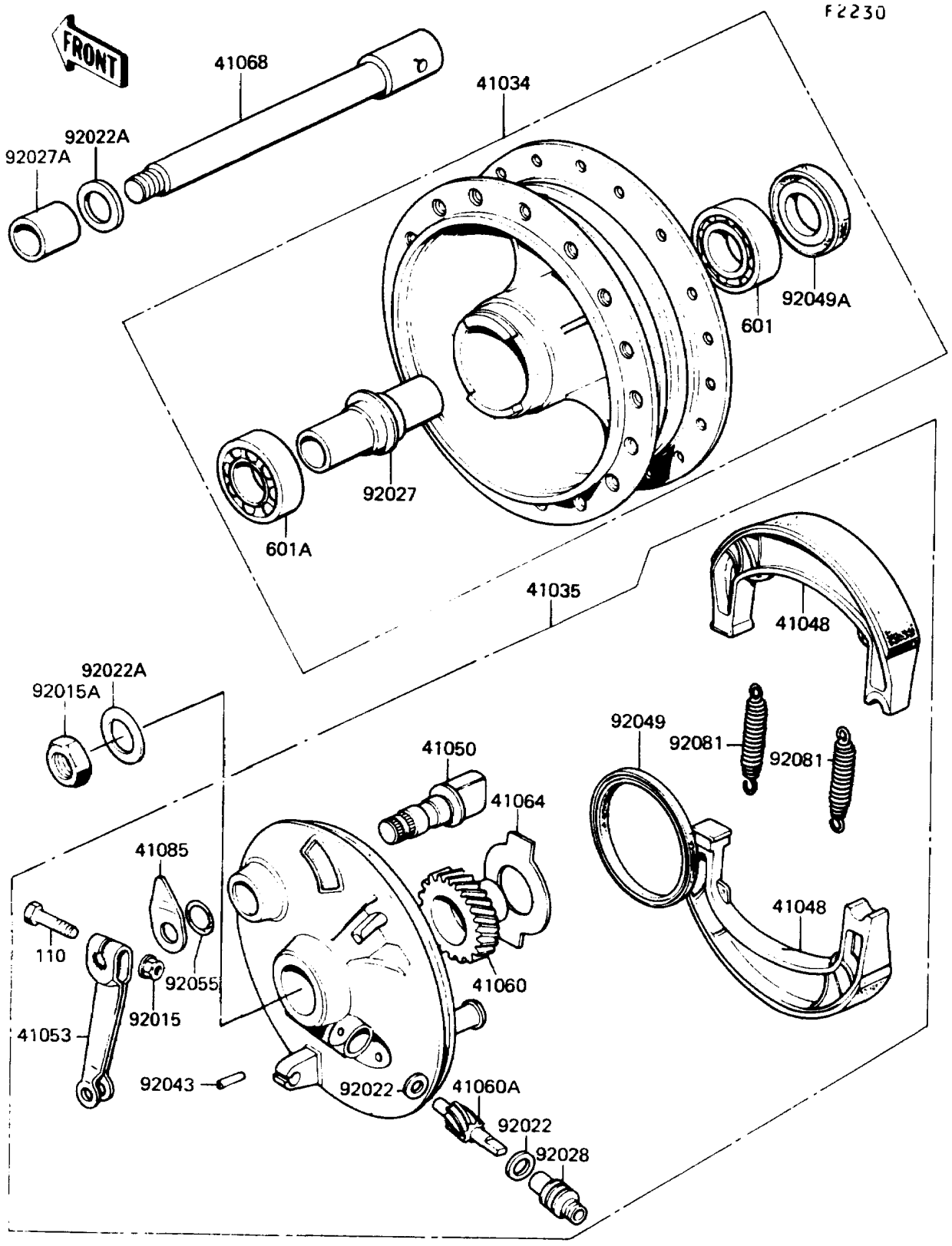

© 2024 Kawasaki Motors Corp., U.S.A.

1988 KE100 PARTS LIST

Front Hub

ITEM NAME	PART NUMBER	QUANTITY
DRUM-ASSY,FR (Ref # 41034)	41034-1047	1
PANEL-ASSY-BRAKE,FR (Ref # 41035)	41035-1080	1
SHOE-BRAKE (Ref # 41048)	41048-017	2
CAM-BRAKE (Ref # 41050)	41050-018	1
LEVER-BRAKE CAM (Ref # 41053)	41053-005	1
GEAR-METER SCREW,22T (Ref # 41060)	41059-022	1
GEAR-METER SCREW,8T (Ref # 41060A)	41060-004	1
RECEIVER-SPEEDOMETER (Ref # 41064)	41064-010	1
AXLE,FR (Ref # 41068)	41068-039	1
INDICATOR,BRAKE SHOE (Ref # 41085)	41085-008	1
NUT,6MM (Ref # 92015)	41072-007	1
NUT,10MM (Ref # 92015A)	42045-005	1
WASHER,5.1X9X0.4 (Ref # 92022)	41063-001	2
WASHER,10.5X22X1.6 (Ref # 92022A)	92022-1558	2
COLLAR,L=51 (Ref # 92027)	41039-002	1
COLLAR,L=13 (Ref # 92027A)	41069-026	1
BUSHING,SPEEDOMETER CABLE (Ref # 92028)	41062-005	1
PIN,SPRING (Ref # 92043)	41082-001	1
SEAL-OIL,BRAKE PANEL (Ref # 92049)	92050-002	1
SEAL-OIL,TC17317 (Ref # 92049A)	92050-063	1
RING-O,BRAKE CAM (Ref # 92055)	92055-004	1
SPRING,BRAKE SHOE (Ref # 92081)	92081-1766	2
BOLT,6X30 (Ref # 110)	110G0630	1
BEARING-BALL,#6200G (Ref # 601)	601B6200G	1
BEARING-BALL,#6300ZG (Ref # 601A)	601B6300ZG	1

© 2024 Kawasaki Motors Corp., U.S.A.