1988 KE100 PARTS DIAGRAM

Swing Arm/Shock Absorber

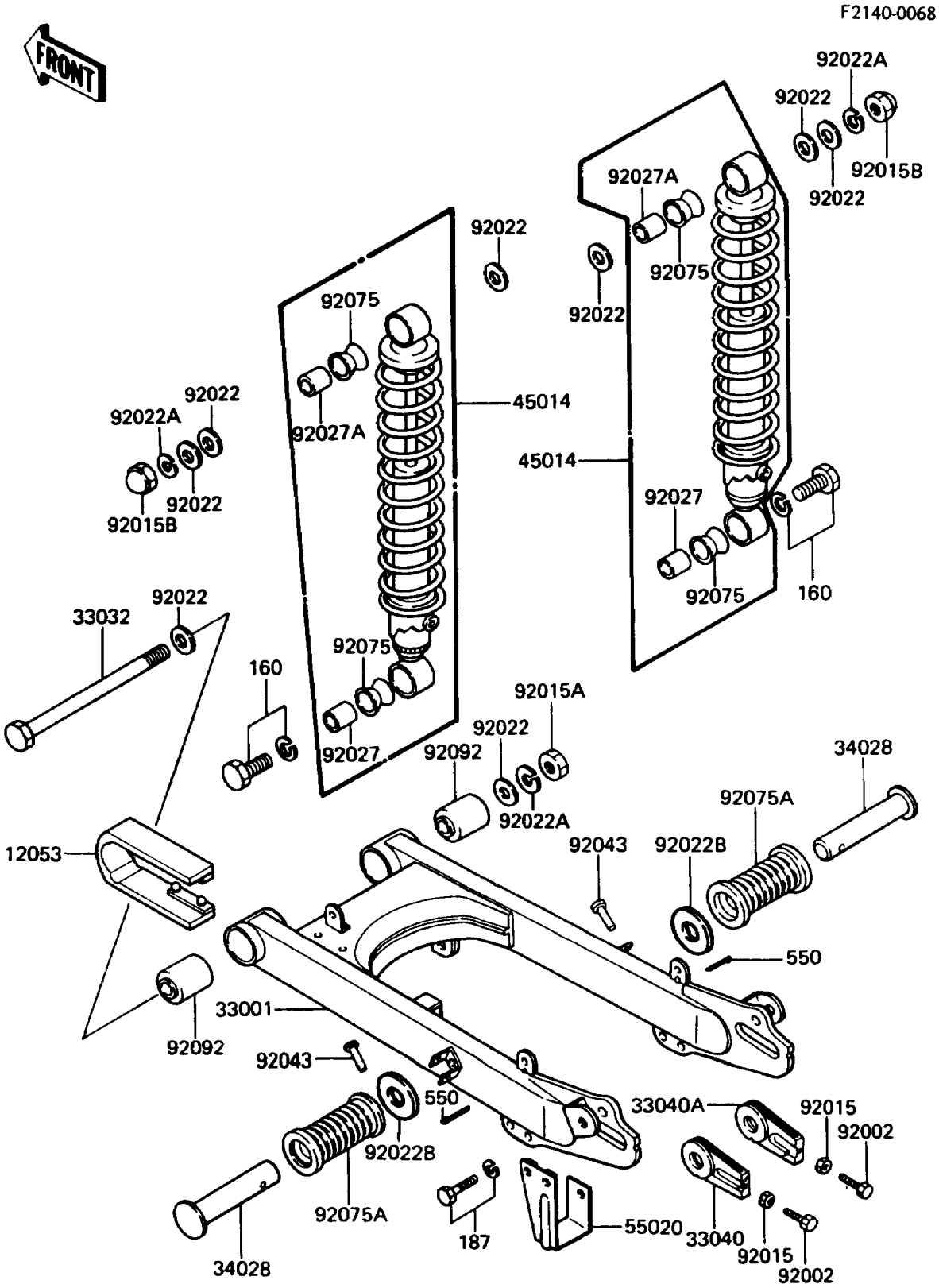

© 2024 Kawasaki Motors Corp., U.S.A.

1988 KE100 PARTS LIST

Swing Arm/Shock Absorber

ITEM NAME	PART NUMBER	QUANTITY
GUIDE-CHAIN,NYLON (Ref # 12053)	12053-1066	1
ARM-COMP-SWING,SILVER (Ref # 33001)	33001-1118	1
SHAFT-SWING ARM (Ref # 33032)	33032-034	1
ADJUSTER-CHAIN,LH (Ref # 33040)	33040-045	1
ADJUSTER-CHAIN,RH (Ref # 33040A)	33040-046	1
STEP,RR (Ref # 34028)	34028-009	2
SHOCKABSORBER (Ref # 45014)	45014-1144	2
GUARD,CHAIN (Ref # 55020)	55020-012	1
BOLT,CHAIN ADJUSTER,8X50 (Ref # 92002)	92002-1076	2
NUT,8MM (Ref # 92015)	92015-1364	2
NUT,12MM (Ref # 92015A)	92015-1381	1
NUT,CAP,12MM (Ref # 92015B)	92020-014	2
WASHER,12MM (Ref # 92022)	92022-1538	8
WASHER,SPRING,12MM (Ref # 92022A)	92022-1541	3
WASHER,20X30X2.3 (Ref # 92022B)	92022-1568	2
COLLAR,SHOCKABSORBER (Ref # 92027)	45016-003	2
COLLAR,SHOCKABSORBER (Ref # 92027A)	92027-1063	2
PIN,6X28 (Ref # 92043)	92043-079	2
DAMPER,SHOCKABSORBER (Ref # 92075)	92075-1020	4
DAMPER (Ref # 92075A)	92076-020	2
BUSHING-RUBBER (Ref # 92092)	92092-005	2
BOLT-FINE-WS (Ref # 160)	160N1035	2
BOLT-UPSET-WSP (Ref # 187)	187X0616	2
PIN-COTTER,2.0X15 (Ref # 550)	550D2015	2

© 2024 Kawasaki Motors Corp., U.S.A.