1990 KE100 PARTS DIAGRAM

Oil Pump

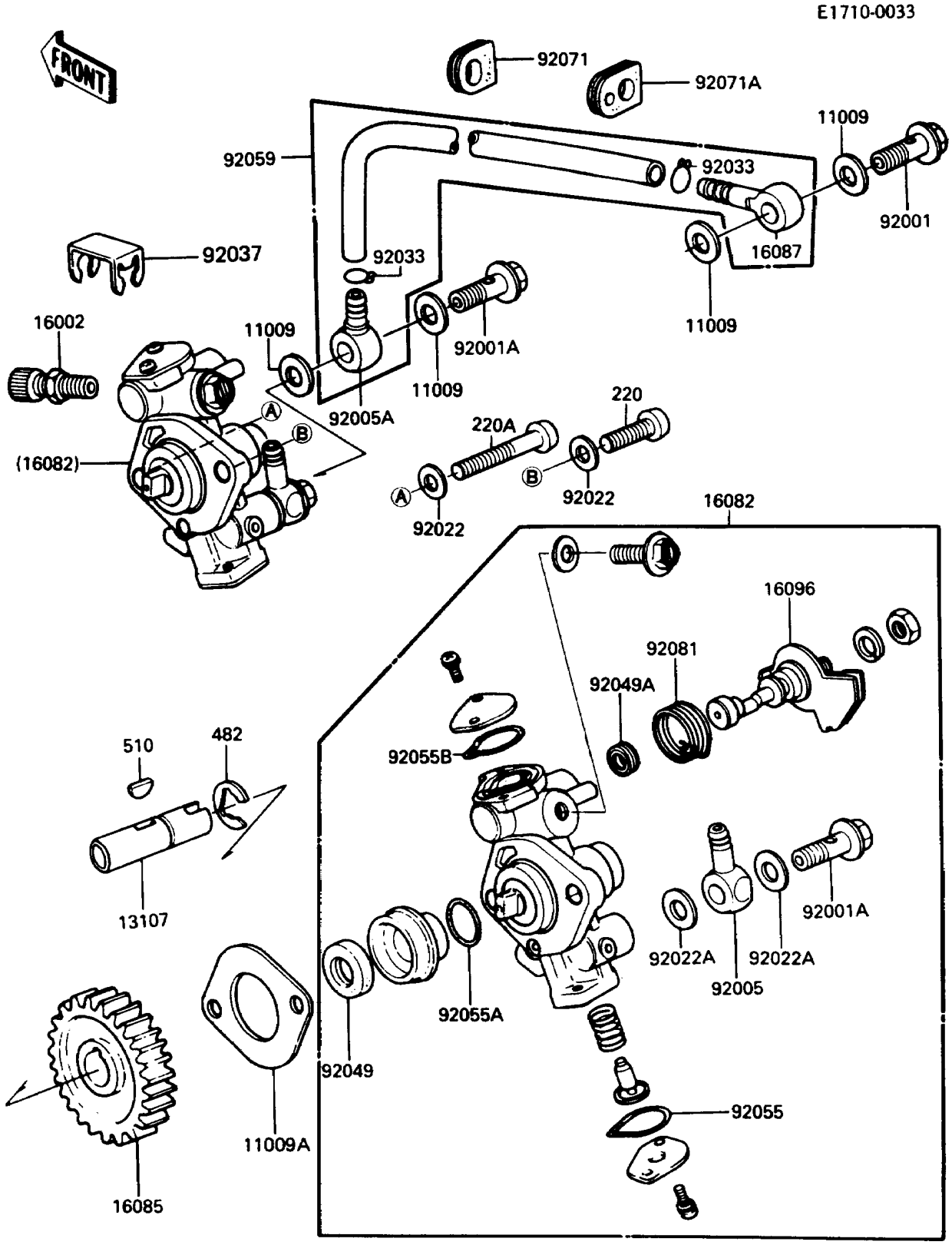

© 2024 Kawasaki Motors Corp., U.S.A.

1990 KE100 PARTS LIST

Oil Pump

ITEM NAME	PART NUMBER	QUANTITY
GASKET,6X12X1.0 (Ref # 11009)	11009-1298	4
GASKET,OIL PUMP (Ref # 11009A)	16094-002	1
SHAFT,OIL PUMP (Ref # 13107)	16086-001	1
ADJUSTER-CABLE (Ref # 16002)	16002-012	1
PUMP-ASSY-OIL (Ref # 16082)	16082-067	1
GEAR,OIL PUMP (Ref # 16085)	16085-004	1
VALVE-CHECK (Ref # 16087)	16128-009	1
LEVER-OIL PUMP (Ref # 16096)	16096-012	1
BOLT,BANJO,L=13.5 (Ref # 92001)	92060-008	1
BOLT,BANJO,L=16 (Ref # 92001A)	92060-013	2
FITTING,BANJO (Ref # 92005)	92061-009	1
FITTING,BANJO (Ref # 92005A)	92061-018	1
WASHER,5.5X10.5X0.8 (Ref # 92022)	92022-037	2
WASHER,6.1X12X1 (Ref # 92022A)	92022-077	2
RING-SNAP (Ref # 92033)	92036-022	2
CLAMP,OIL PUMP CABLE (Ref # 92037)	92037-1107	1
SEAL-OIL,OIL PUMP SHAFT (Ref # 92049)	16091-001	1
SEAL-OIL,CAMSHAFT,"X"TYPE (Ref # 92049A)	92049-1294	1
RING-O,CAP,BANJO SIDE (Ref # 92055)	16088-002	1
RING-O,OIL PUMP SHAFT (Ref # 92055A)	16090-002	1
RING-O,CAP,CAMSHAFT SIDE (Ref # 92055B)	16090-004	1
TUBE,OIL (Ref # 92059)	16134-021	1
GROMMET (Ref # 92071)	21017-002	1
GROMMET,OIL PIPE (Ref # 92071A)	92071-067	1
SPRING,OIL PUMP LEVER (Ref # 92081)	16093-006	1
SCREW-PAN-CROS (Ref # 220)	220B0514	1
SCREW-PAN-CROS (Ref # 220A)	220B0528	1
CIRCLIP-TYPE-E,9MM (Ref # 482)	482K9000	1
KEY-WOODRUFF (Ref # 510)	510A3100	1

© 2024 Kawasaki Motors Corp., U.S.A.