1986 KDX80 PARTS DIAGRAM

Handlebar

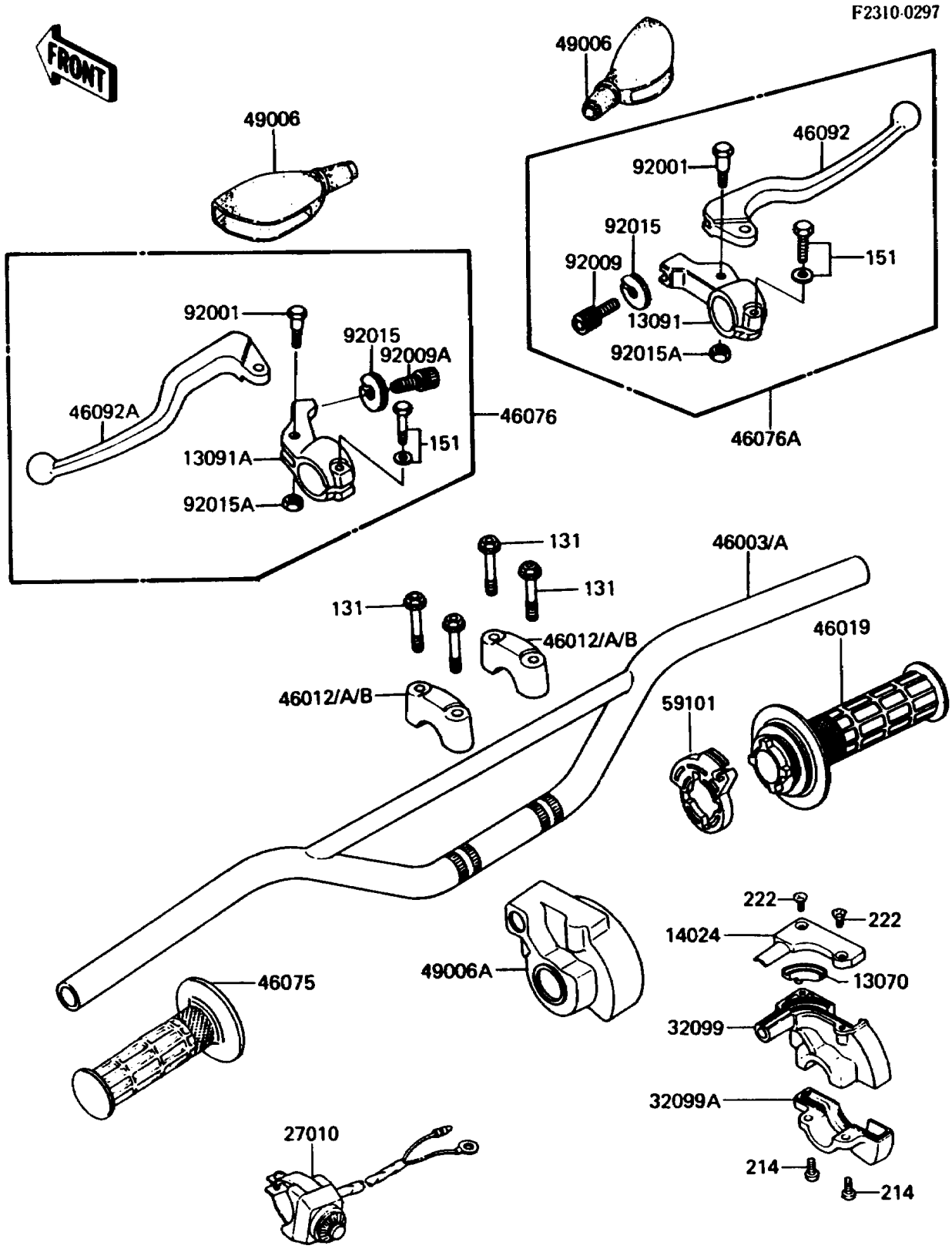

© 2026 Kawasaki Motors Corp., U.S.A.

1986 KDX80 PARTS LIST

Handlebar

ITEM NAME	PART NUMBER	QUANTITY
GUIDE,THROTTLE (Ref # 13070)	13070-1074	1
HOLDER,BRAKE LEVER,FR,F.BLACK (Ref # 13091)	46060-011-21	1
HOLDER,CLUTCH LEVER,F.BLACK (Ref # 13091A)	46094-015-21	1
COVER,THROTTLE CASE UPP (Ref # 14024)	14025-1646	1
SWITCH,ENGINE STOP (Ref # 27010)	27010-1161	1
CASE,THROTTLE UPP (Ref # 32099)	32099-1036	1
CASE,THROTTLE LWR (Ref # 32099A)	32099-1044	1
HANDLE (Ref # 46003)	46003-1112	1
HOLDER-HANDLE (Ref # 46012B)	46012-1189	2
GRIP-ASSY,THROTTLE (Ref # 46019)	46019-1054	1
GRIP,LH (Ref # 46075)	46075-1024	1
LEVER-ASSY-GRIP,LH (Ref # 46076)	46076-1011	1
LEVER-ASSY-GRIP,RH,BRAKE (Ref # 46076A)	46076-1103	1
LEVER-GRIP,FRONT BRAKE (Ref # 46092)	46092-1014	1
LEVER-GRIP,CLUTCH (Ref # 46092A)	46092-1015	1
BOOT,LEVER HOLDER (Ref # 49006)	49006-1017	2
BOOT,THROTTLE CASE (Ref # 49006A)	49006-1097	1
REEL,THROTTLE (Ref # 59101)	59101-1102	1
BOLT,5X22 (Ref # 92001)	92007-046	2
SCREW,CABLE ADJUST (Ref # 92009)	46055-001	1
SCREW,CABLE ADJUST,8MM (Ref # 92009A)	46055-003	1
NUT,CABLE ADJUST LOCK (Ref # 92015)	46056-005	2
NUT,LOCK,5MM (Ref # 92015A)	92019-014	2
BOLT-FLANGED,8X30 (Ref # 131)	131G0830	4
BOLT-WP (Ref # 151)	151N0625	2
SCREW-PAN+- (Ref # 214)	214C0518	2
SCREW-CSK-RD-CROS (Ref # 222)	222E0412	2

© 2026 Kawasaki Motors Corp., U.S.A.