# 2015 Ninja H2 PARTS DIAGRAM

## Transmission

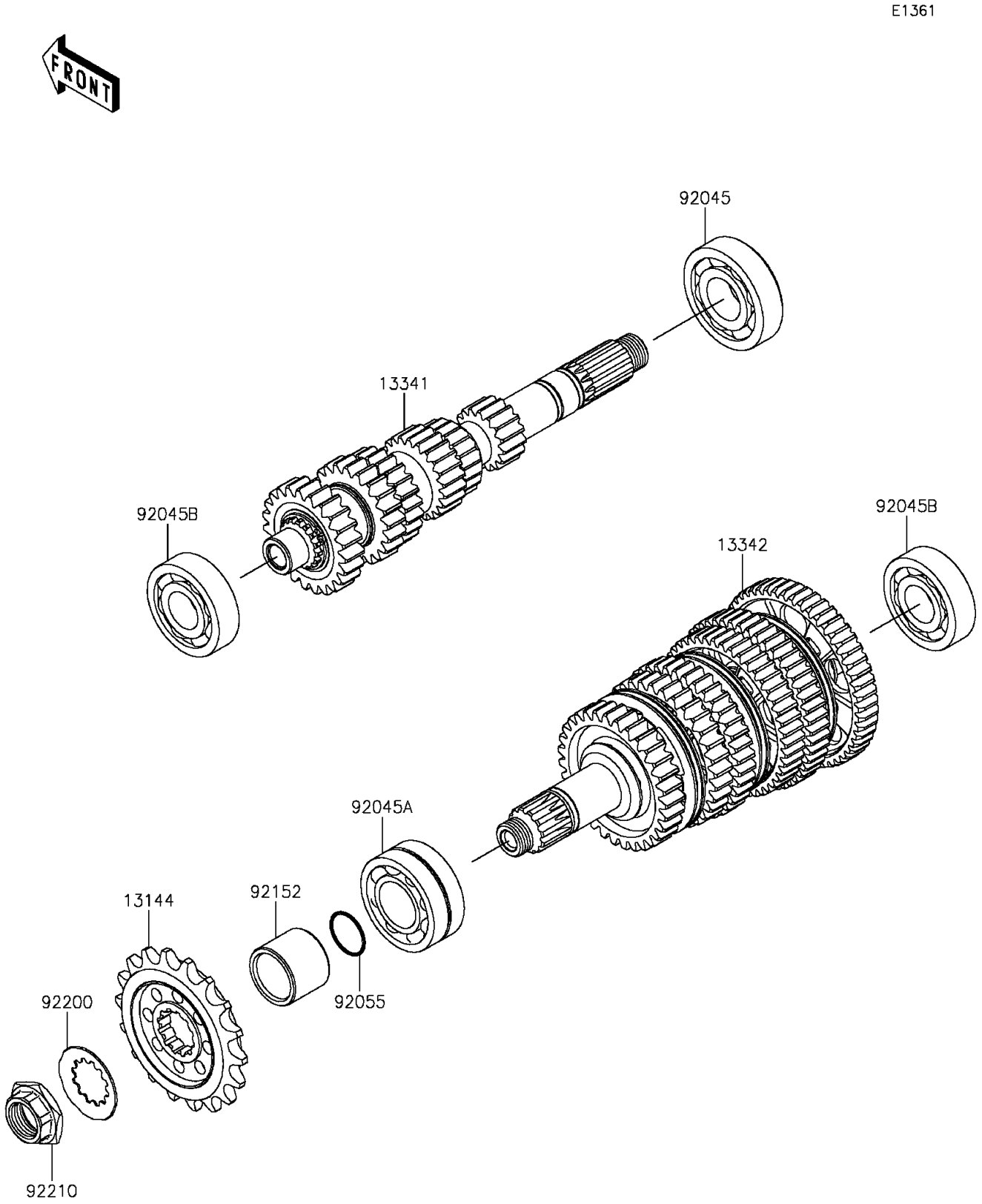


© 2024 Kawasaki Motors Corp., U.S.A.

# 2015 Ninja H2 PARTS LIST

## Transmission

| ITEM NAME | PART NUMBER | QUANTITY |
|---|---|---|
| SPROCKET-OUTPUT,18T (Ref # 13144) | 13144-0575 | 1 |
| TRANSMISSION-ASSY INPUT (Ref # 13341) | 13341-0606 | 1 |
| TRANSMISSION-ASSY OUTPUT (Ref # 13342) | 13342-0610 | 1 |
| BEARING-BALL,830045-5SH2 (Ref # 92045) | 92045-0047 | 1 |
| BEARING-BALL,DAC2857NSSH6CS9 (Ref # 92045A) | 92045-0049 | 1 |
| BEARING-BALL,63/22LU (Ref # 92045B) | 92045-0156 | 2 |
| RING-O,23.5X1.5 (Ref # 92055) | 92055-0823 | 1 |
| COLLAR,27.5X35X27.7 (Ref # 92152) | 92152-1954 | 1 |
| WASHER,23.9X45X1.0 (Ref # 92200) | 92200-0260 | 1 |
| NUT,20MM (Ref # 92210) | 92210-0942 | 1 |

© 2024 Kawasaki Motors Corp., U.S.A.