2015 NINJA H2™ PARTS DIAGRAM

Cylinder Head

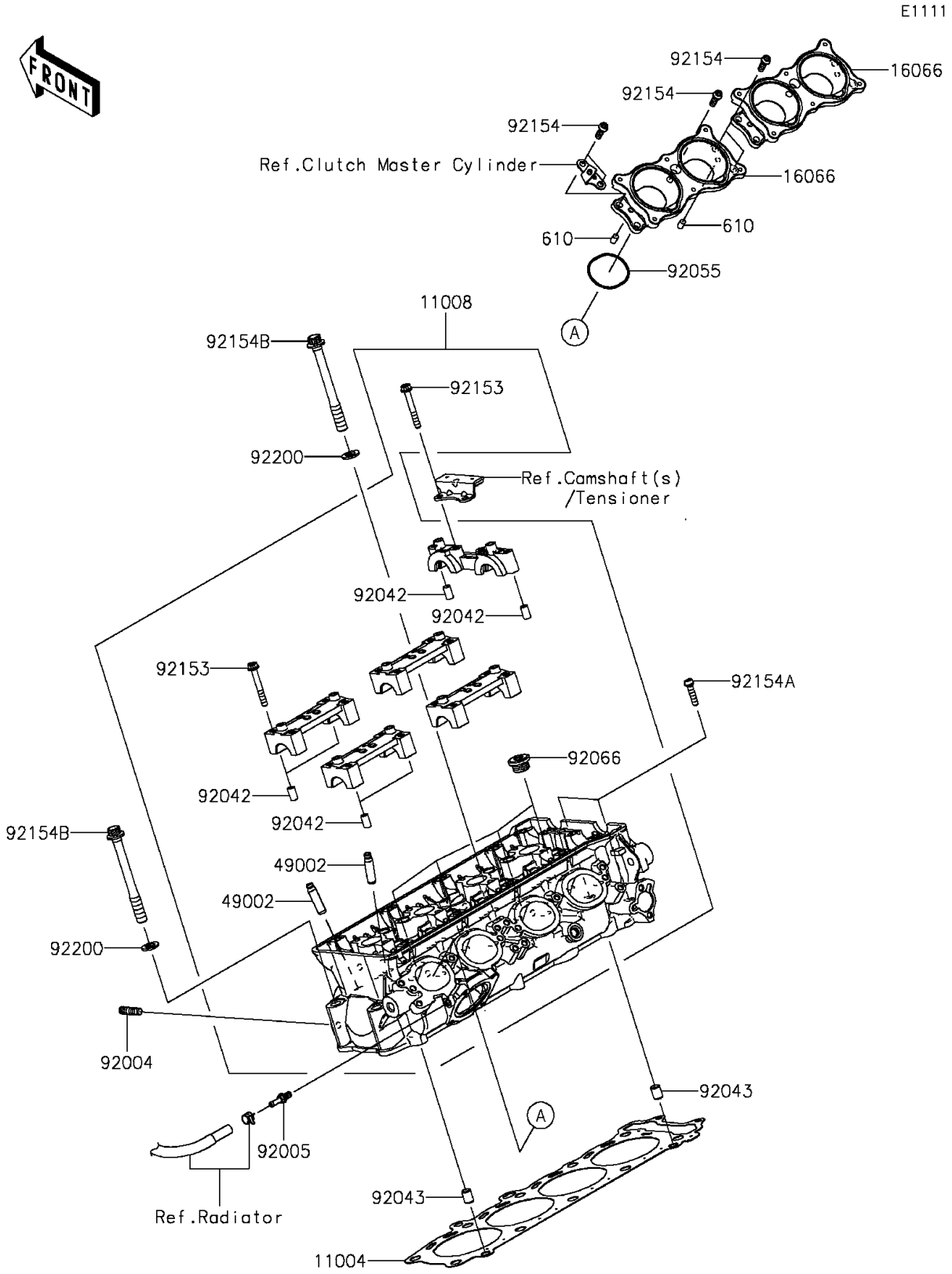

© 2024 Kawasaki Motors Corp., U.S.A.

2015 NINJA H2™ PARTS LIST

Cylinder Head

ITEM NAME	PART NUMBER	QUANTITY

© 2024 Kawasaki Motors Corp., U.S.A.