2017 MULE PRO-FX™ EPS CAMO PARTS DIAGRAM

Drive Shaft-Propeller

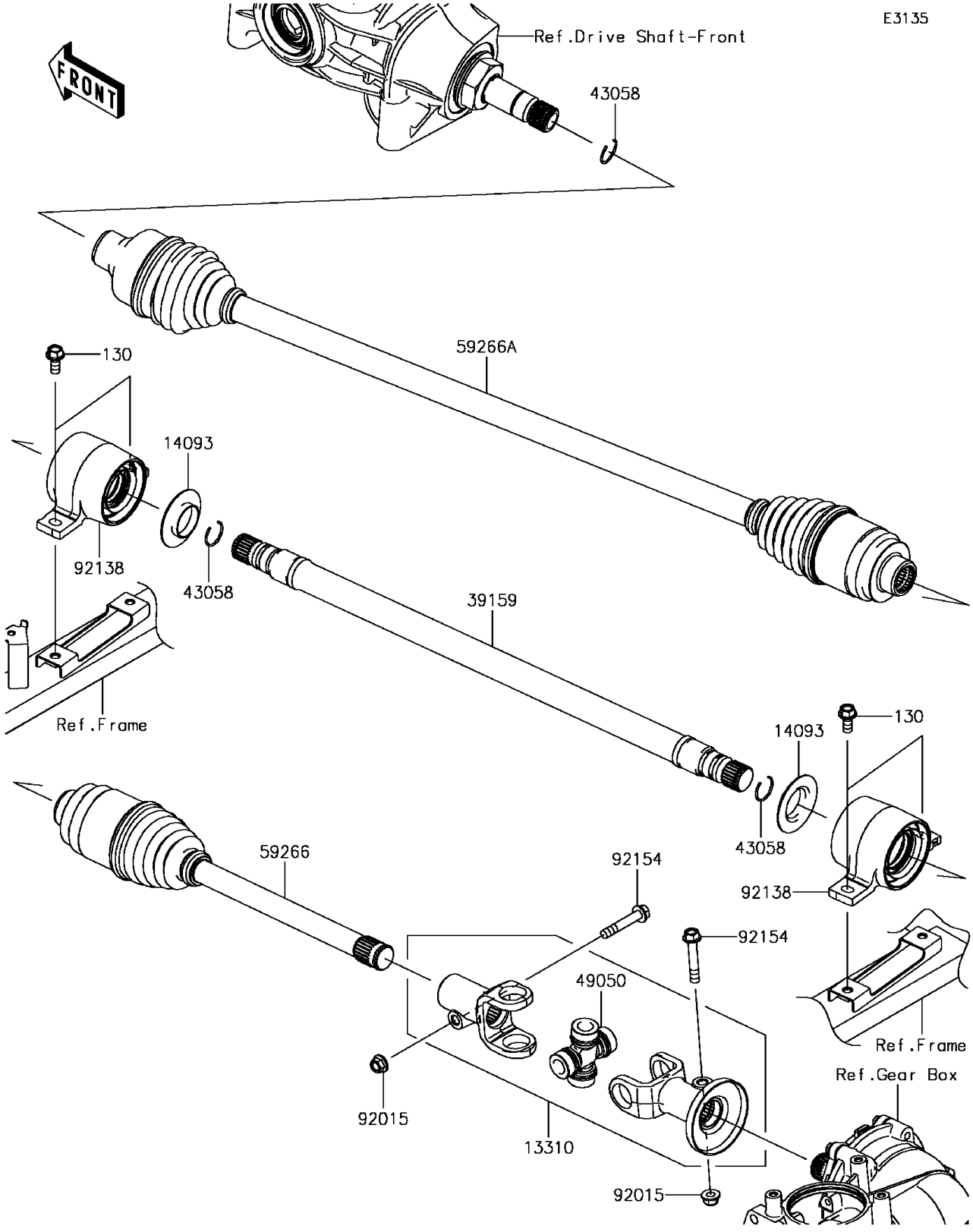

© 2024 Kawasaki Motors Corp., U.S.A.

2017 MULE PRO-FX™ EPS CAMO PARTS LIST

Drive Shaft-Propeller

ITEM NAME	PART NUMBER	QUANTITY

© 2024 Kawasaki Motors Corp., U.S.A.