2017 MULE PRO-FX™ EPS LE PARTS DIAGRAM

Rear Suspension

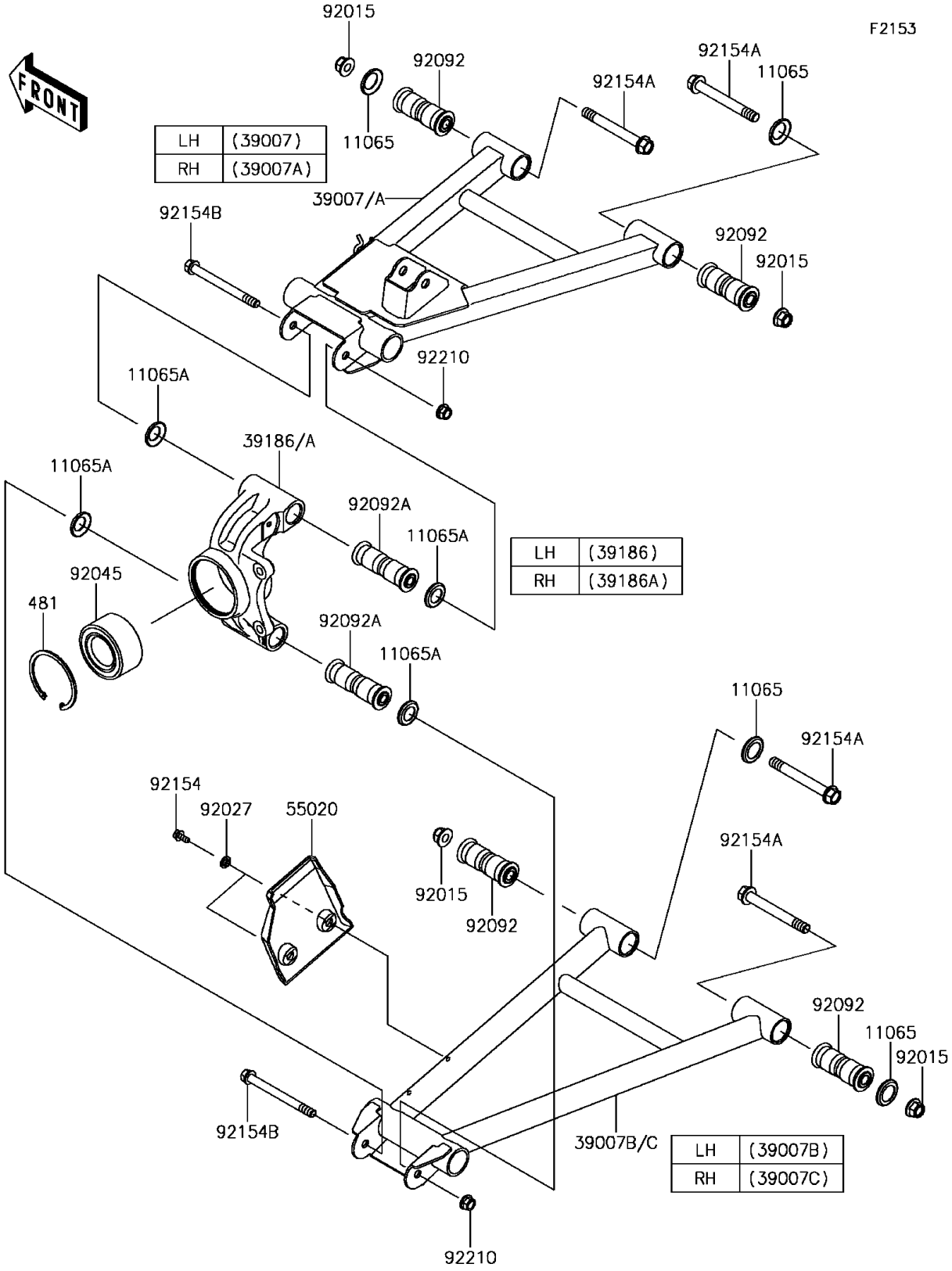

© 2026 Kawasaki Motors Corp., U.S.A.

2017 MULE PRO-FX™ EPS LE PARTS LIST

Rear Suspension

ITEM NAME	PART NUMBER	QUANTITY

© 2026 Kawasaki Motors Corp., U.S.A.