2016 VULCAN® S ABS SE PARTS DIAGRAM

Valve(s)

E1210

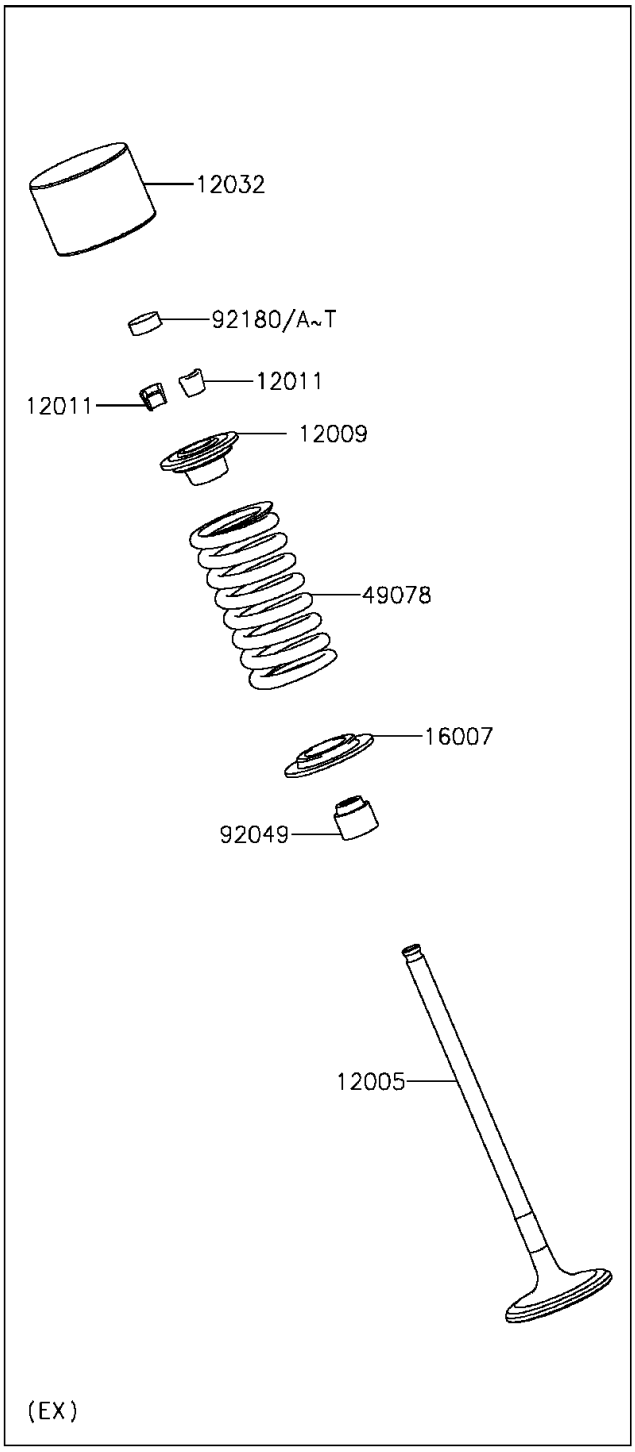

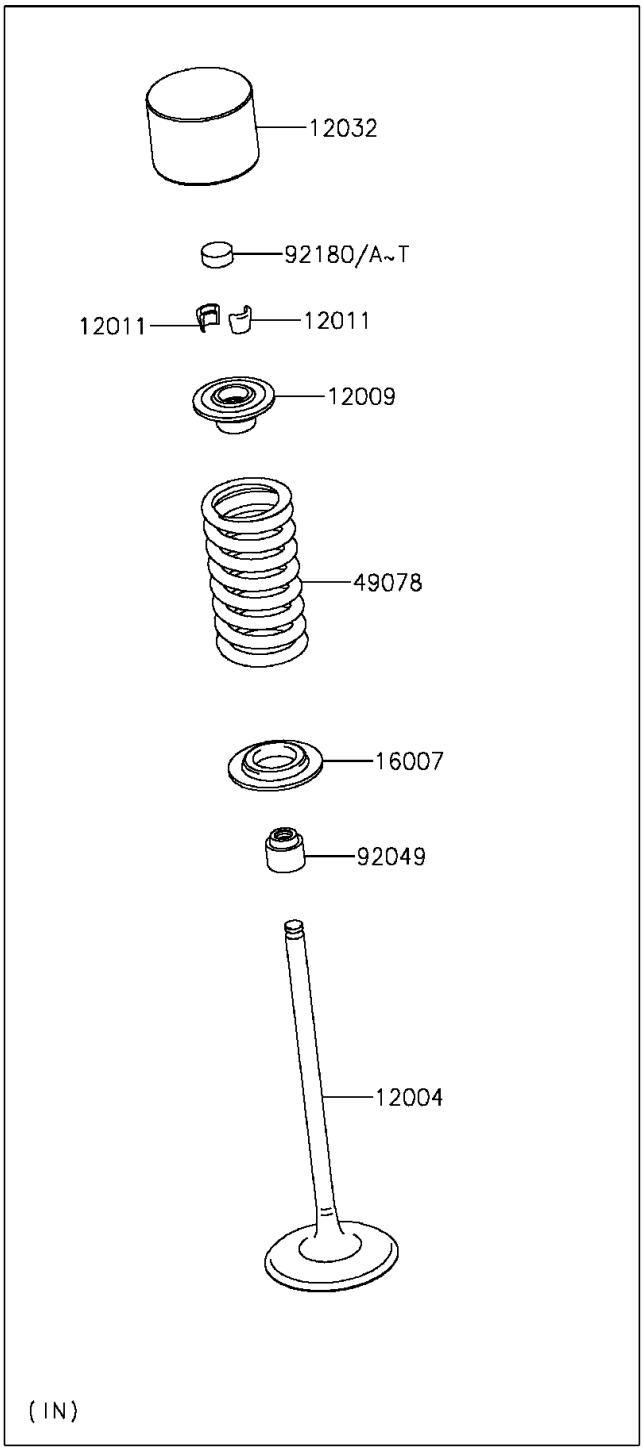

© 2024 Kawasaki Motors Corp., U.S.A.

2016 VULCAN® S ABS SE PARTS LIST

Valve(s)

ITEM NAME	PART NUMBER	QUANTITY

© 2024 Kawasaki Motors Corp., U.S.A.