# 2000 KDX200 PARTS DIAGRAM

## Headlight(s)

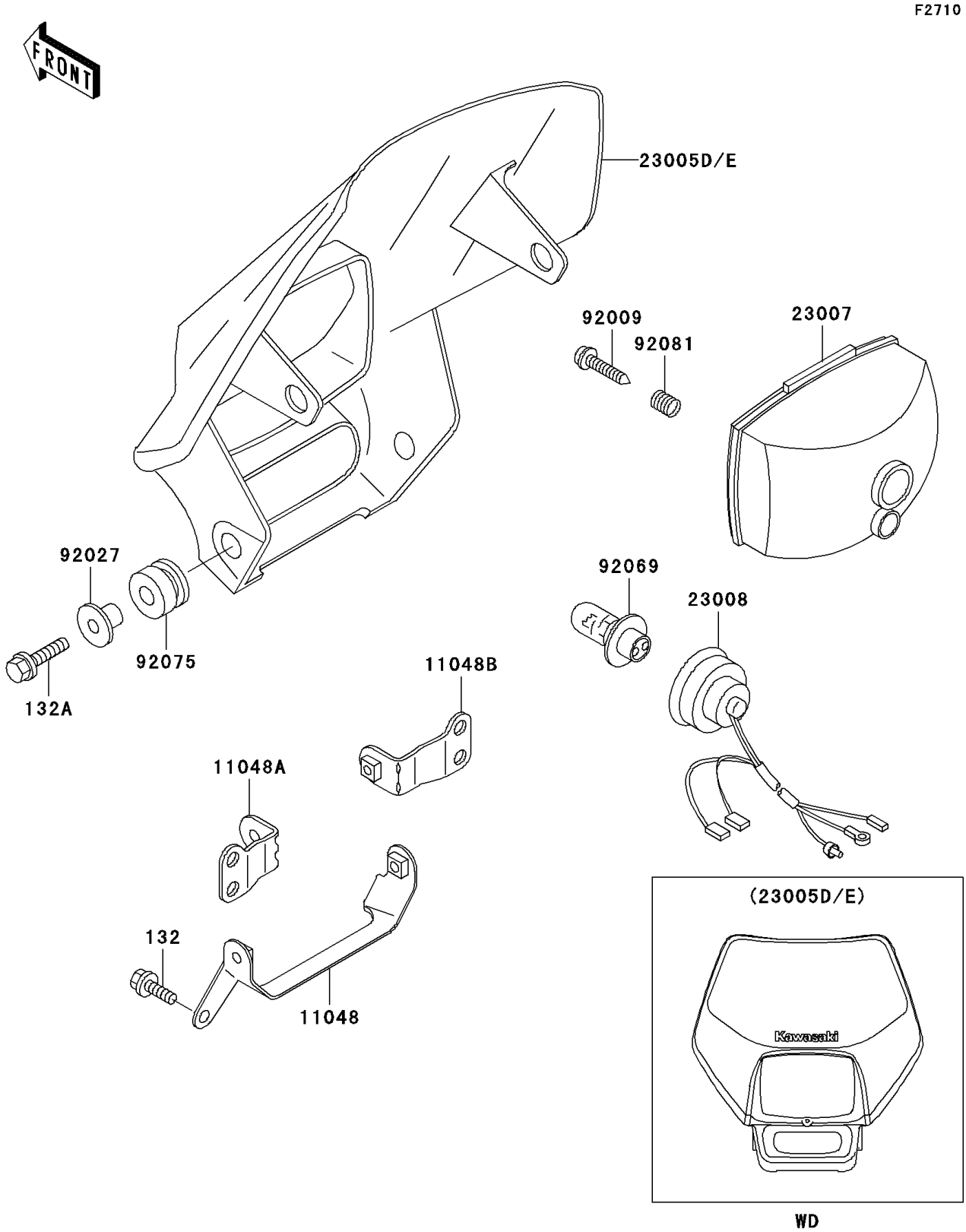


© 2024 Kawasaki Motors Corp., U.S.A.

# 2000 KDX200 PARTS LIST

## Headlight(s)

| ITEM NAME | PART NUMBER | QUANTITY |
|---|---|---|
| BOLT-FLANGED-SMALL (Ref # 132) | 132G0612 | 2 |
| BOLT-FLANGED-SMALL (Ref # 132A) | 132G0620 | 4 |
| BRACKET,HEAD LAMP,LWR (Ref # 11048) | 11048-1089 | 1 |
| BRACKET,HEAD LAMP,UPP,LH (Ref # 11048A) | 11048-1534 | 1 |
| BRACKET,HEAD LAMP,UPP,RH (Ref # 11048B) | 11048-1535 | 1 |
| BODY-COMP-HEAD LAMP,L.GREEN (Ref # 23005D) | 23005-5040-6W | 1 |
| LENS-COMP,HEAD LAMP (Ref # 23007) | 23007-1246 | 1 |
| SOCKET-ASSY,HEAD LAMP (Ref # 23008) | 23008-1513 | 1 |
| SCREW,TAPPING (Ref # 92009) | 92009-1695 | 1 |
| COLLAR (Ref # 92027) | 92027-1183 | 4 |
| BULB,12V 30/30W (Ref # 92069) | 92069-1080 | 1 |
| DAMPER,RUBBER (Ref # 92075) | 92075-1123 | 4 |
| SPRING,FOUCUS ADJUSTING (Ref # 92081) | 92081-1519 | 1 |

© 2024 Kawasaki Motors Corp., U.S.A.