1986 KDX200 PARTS DIAGRAM

Front Hub

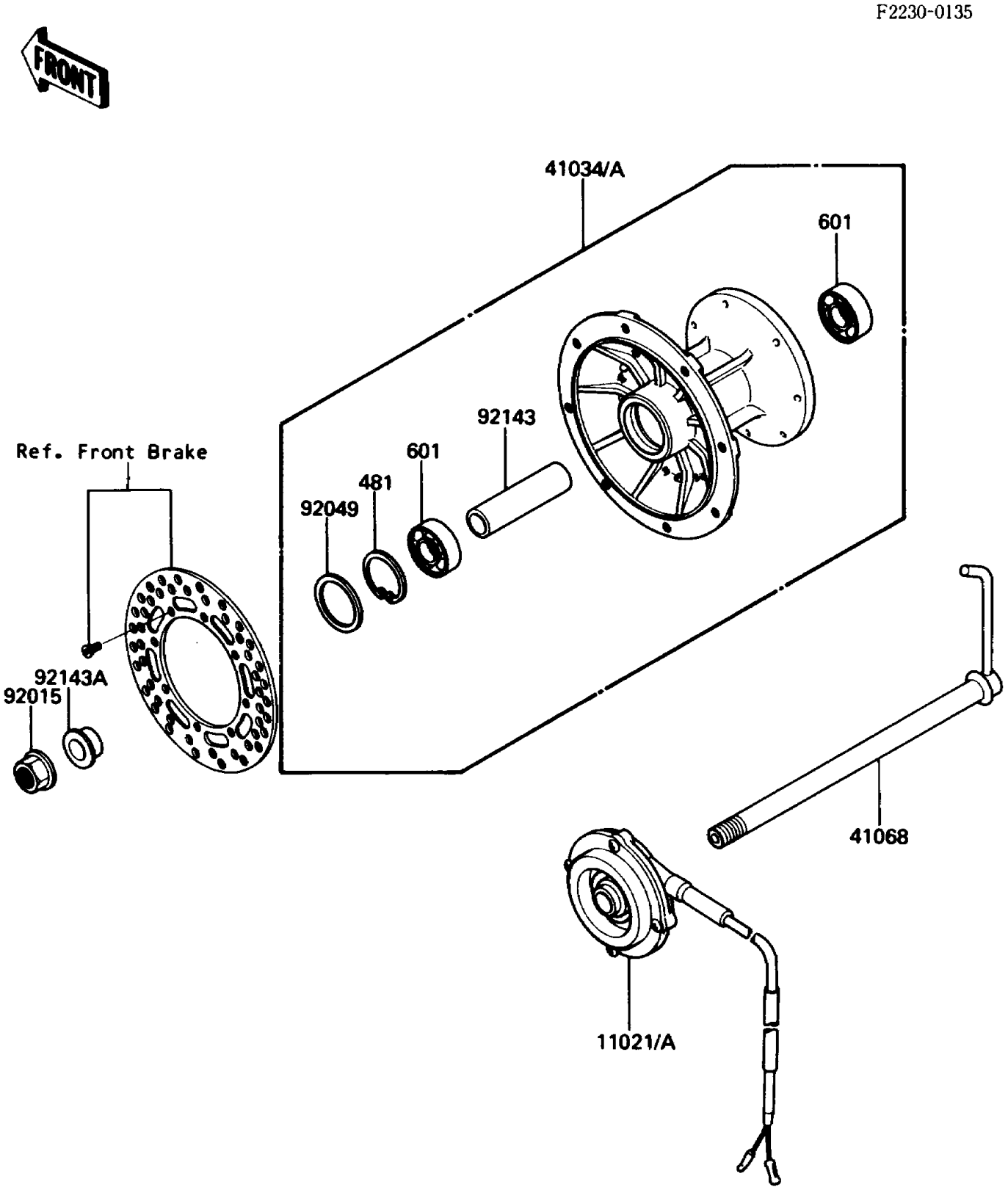

© 2024 Kawasaki Motors Corp., U.S.A.

1986 KDX200 PARTS LIST

Front Hub

ITEM NAME	PART NUMBER	QUANTITY
CASE-ASSY,DISTANCE SENSOR (Ref # 11021)	11021-1017	1
DRUM-ASSY,FRONT BRAKE (Ref # 41034)	41034-1141	1
AXLE,FR (Ref # 41068)	41068-1210	1
NUT,FLANGED,14MM (Ref # 92015)	92015-1032	1
SEAL-OIL,MH20354.5 (Ref # 92049)	92049-1176	1
COLLAR,15.2X22.2X75 (Ref # 92143)	92027-1958	1
COLLAR,L=12 (Ref # 92143A)	92027-1959	1
CIRCLIP-TYPE-C,35MM (Ref # 481)	481J3500	1
BEARING-BALL,#6202UC3 (Ref # 601)	601B6202U	2

© 2024 Kawasaki Motors Corp., U.S.A.