1989 KD80 PARTS DIAGRAM

Stand(s)

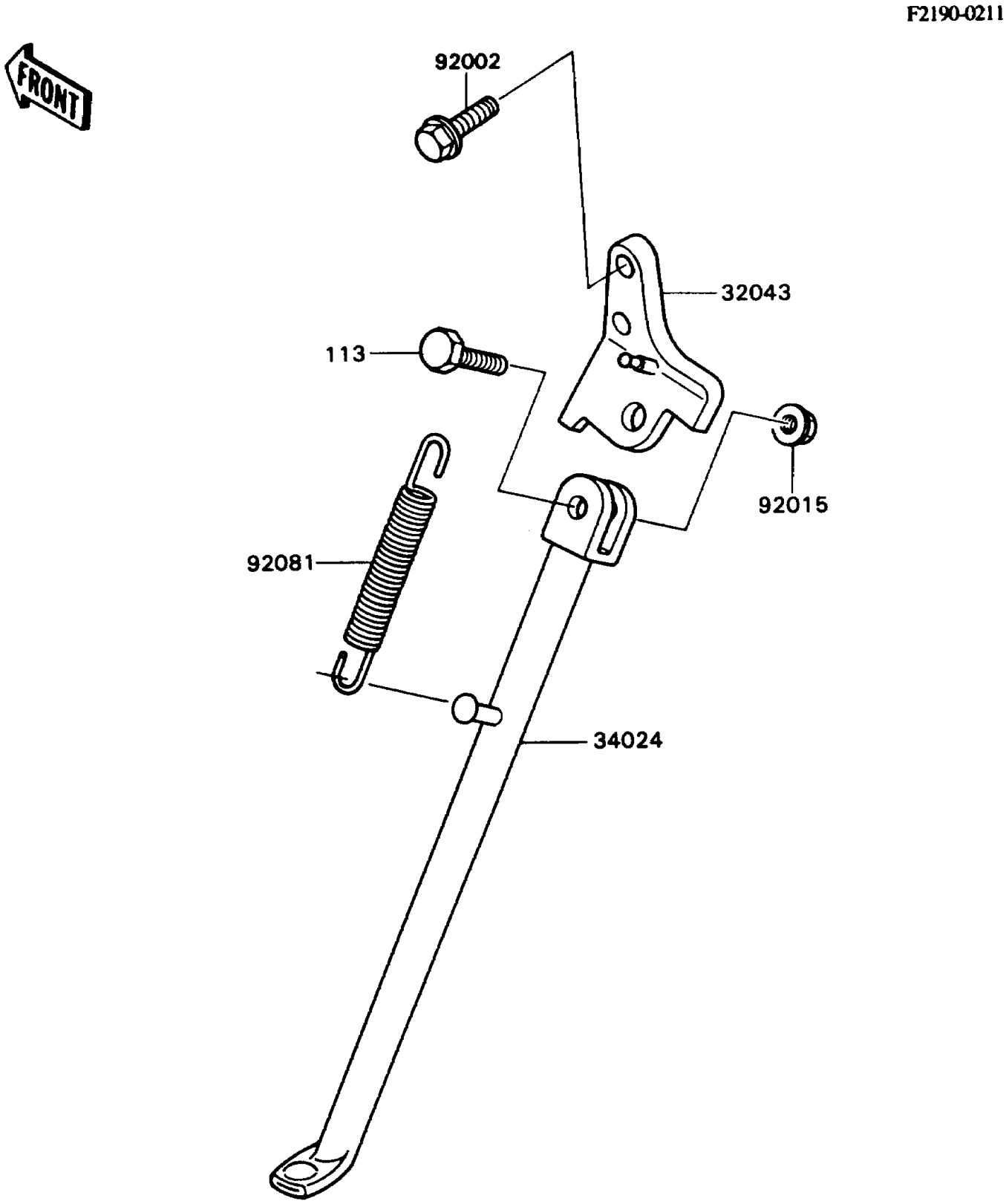

© 2024 Kawasaki Motors Corp., U.S.A.

1989 KD80 PARTS LIST

Stand(s)

ITEM NAME	PART NUMBER	QUANTITY
BRACKET-STAND,SIDE (Ref # 32043)	32043-1322	1
STAND-SIDE (Ref # 34024)	34024-1253	1
BOLT,8X14 (Ref # 92002)	92002-1589	2
NUT (Ref # 92015)	92015-1541	1
SPRING,STAND (Ref # 92081)	34025-005	1
BOLT-SMALL-FINE,10X30 (Ref # 113)	113J1030	1

© 2024 Kawasaki Motors Corp., U.S.A.