2015 TERYX4™ LE PARTS DIAGRAM

Headlight(s)

F2710

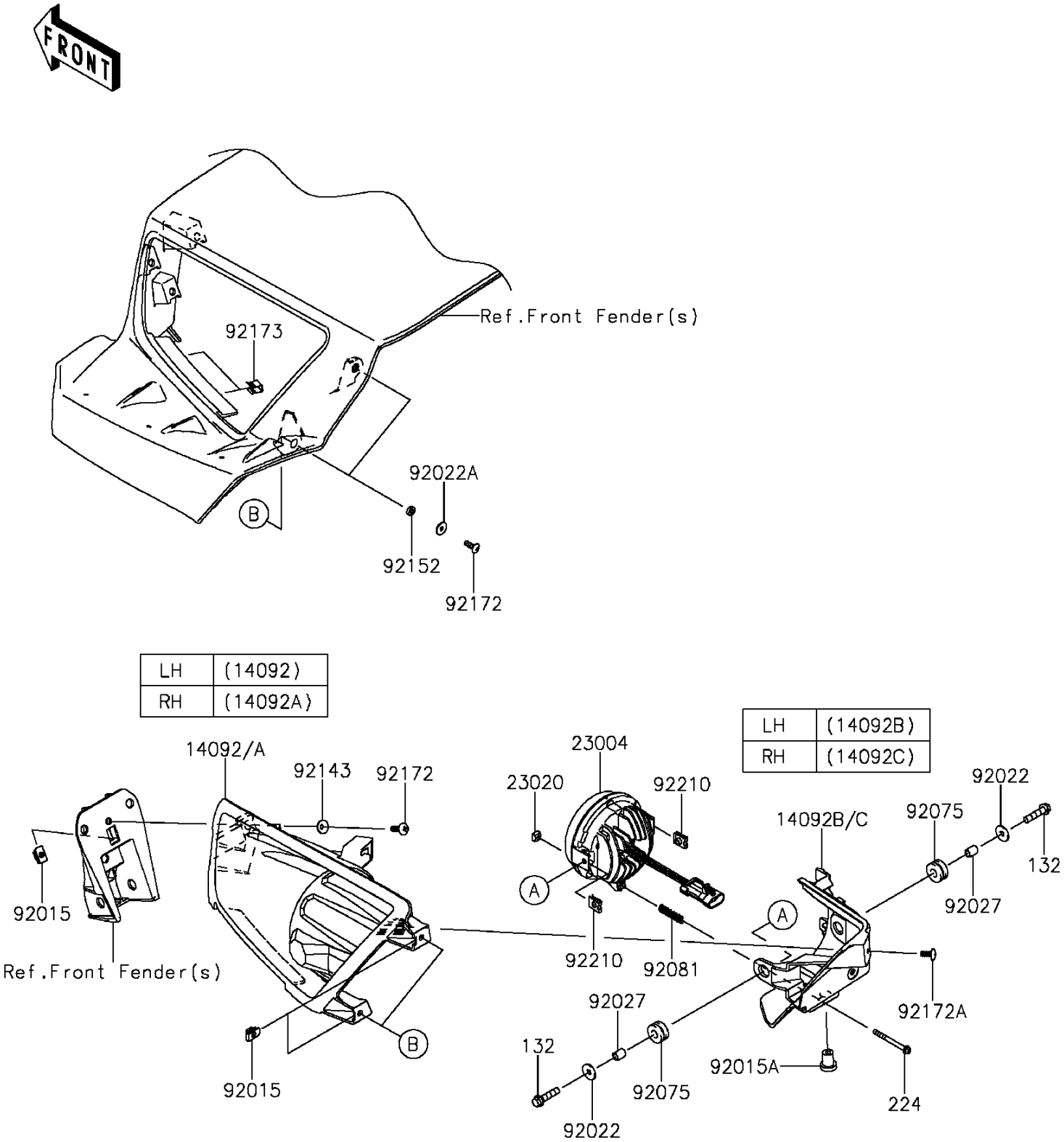

© 2024 Kawasaki Motors Corp., U.S.A.

2015 TERYX4™ LE PARTS LIST

Headlight(s)

ITEM NAME	PART NUMBER	QUANTITY
BOLT-FLANGED-SMALL,6X25 (Ref # 132)	132BA0625	4
SCREW-PAN-WP-CROS,4X45 (Ref # 224)	224AA0445	2
COVER,HEAD LAMP,FR,LH (Ref # 14092)	14092-0054	1
COVER,HEAD LAMP,FR,RH (Ref # 14092A)	14092-0055	1
COVER,HEAD LAMP,RR,LH (Ref # 14092B)	14092-0056	1
COVER,HEAD LAMP,RR,RH (Ref # 14092C)	14092-0057	1
LAMP-HEAD,LED (Ref # 23004)	23004-0341	2
NUT,4MM,FOCUS ADJUST (Ref # 23020)	23020-018	2
NUT,5MM (Ref # 92015)	92015-1627	6
NUT,RUBBER,6MM (Ref # 92015A)	92015-1692	2
WASHER,6.5X20X1.6 (Ref # 92022)	92022-125	4
WASHER,5.2X16X1.2 (Ref # 92022A)	92022-263	4
COLLAR,6.8X10X12 (Ref # 92027)	92027-162	4
DAMPER (Ref # 92075)	92075-1690	4
SPRING,FOCUS ADJUST (Ref # 92081)	92081-1896	2
COLLAR (Ref # 92143)	92143-1087	2
COLLAR,5.3X10.7X3 (Ref # 92152)	92152-1703	4
SCREW,5X16 (Ref # 92172)	92172-0322	6
SCREW,5X12 (Ref # 92172A)	92172-3714	2
CLAMP (Ref # 92173)	92173-0104	4
NUT (Ref # 92210)	92210-1125	4

© 2024 Kawasaki Motors Corp., U.S.A.