1999 Bayou 220 PARTS DIAGRAM

Optional Parts(Meter)

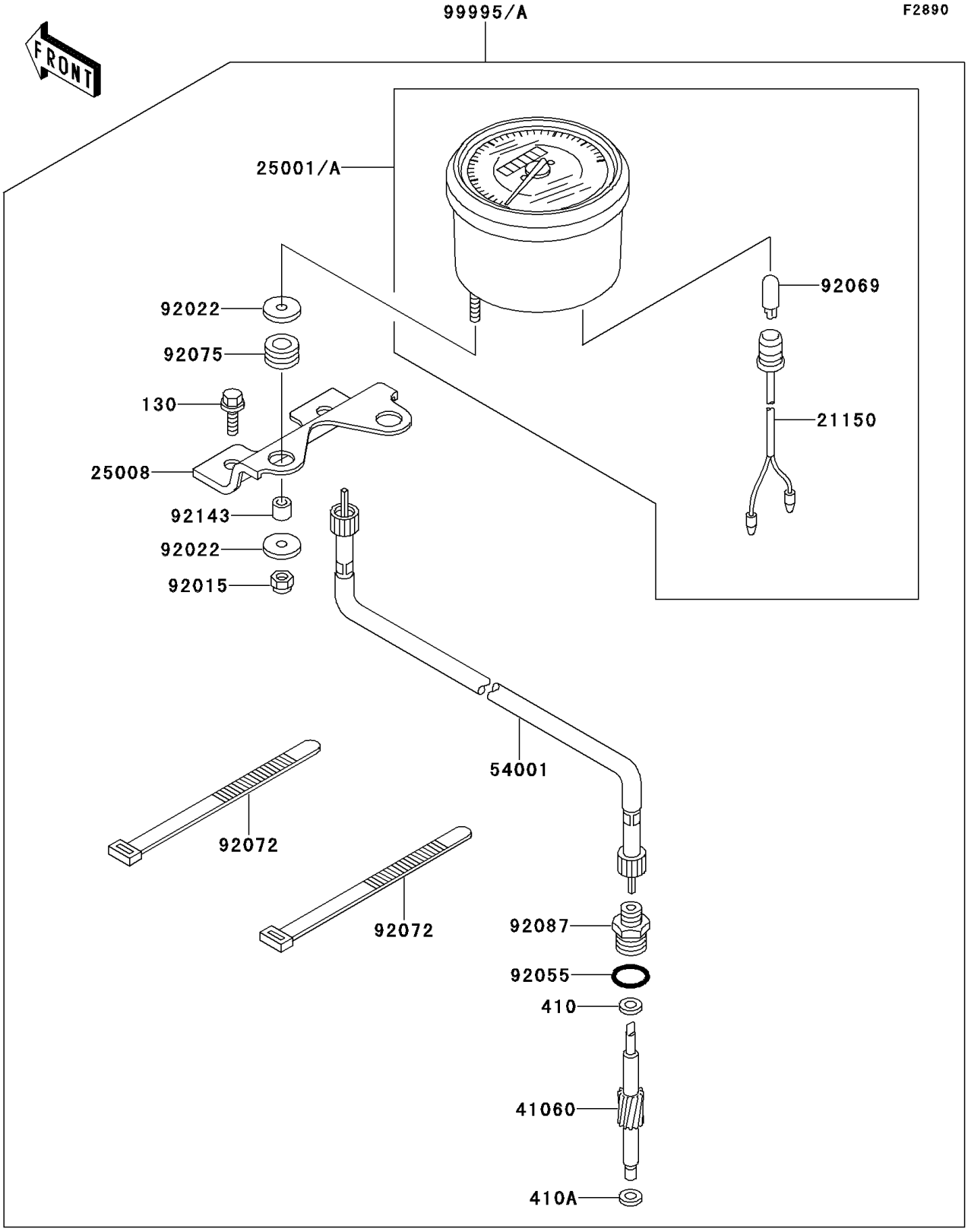

© 2024 Kawasaki Motors Corp., U.S.A.

1999 Bayou 220 PARTS LIST

Optional Parts(Meter)

ITEM NAME	PART NUMBER	QUANTITY
BOLT-FLANGED (Ref # 130)	130J0812	2
WASHER-PLAIN-SMALL,5MM (Ref # 410)	410B0500	1
WASHER-PLAIN-SMALL,6MM (Ref # 410A)	410B0600	1
CORD-ASSY,SPEEDOMETER (Ref # 21150)	21150-1054	1
BRACKET-METER (Ref # 25008)	25008-1149	1
GEAR-METER SCREW (Ref # 41060)	41060-1117	1
CABLE-SPEEDOMETER (Ref # 54001)	54001-1139	1
NUT,LOCK,5MM (Ref # 92015)	92015-1221	2
WASHER,5.5X20X1.2 (Ref # 92022)	92022-1405	4
RING-O,ID=13.8 (Ref # 92055)	92055-1141	1
BULB,12V 3.4W,T10 (Ref # 92069)	92069-1007	1
BAND,L=123 (Ref # 92072)	92072-030	2
DAMPER (Ref # 92075)	92075-1409	2
BUSHING-METER GEAR (Ref # 92087)	92087-1054	1
COLLAR,5.5X10X8.5 (Ref # 92143)	92143-1235	2
METER-ASSY,SPEED,MPH (Ref # 25001)	25001-1723	1
METER-ASSY,SPEED,KPH (Ref # 25001A)	25001-1725	1
KIT.,METER,MPH (Ref # 99995)	99995-1003	1
KIT.,METER,KPH (Ref # 99995A)	99995-1004	1

© 2024 Kawasaki Motors Corp., U.S.A.