1992 Bayou 220 PARTS DIAGRAM

Ignition Switch

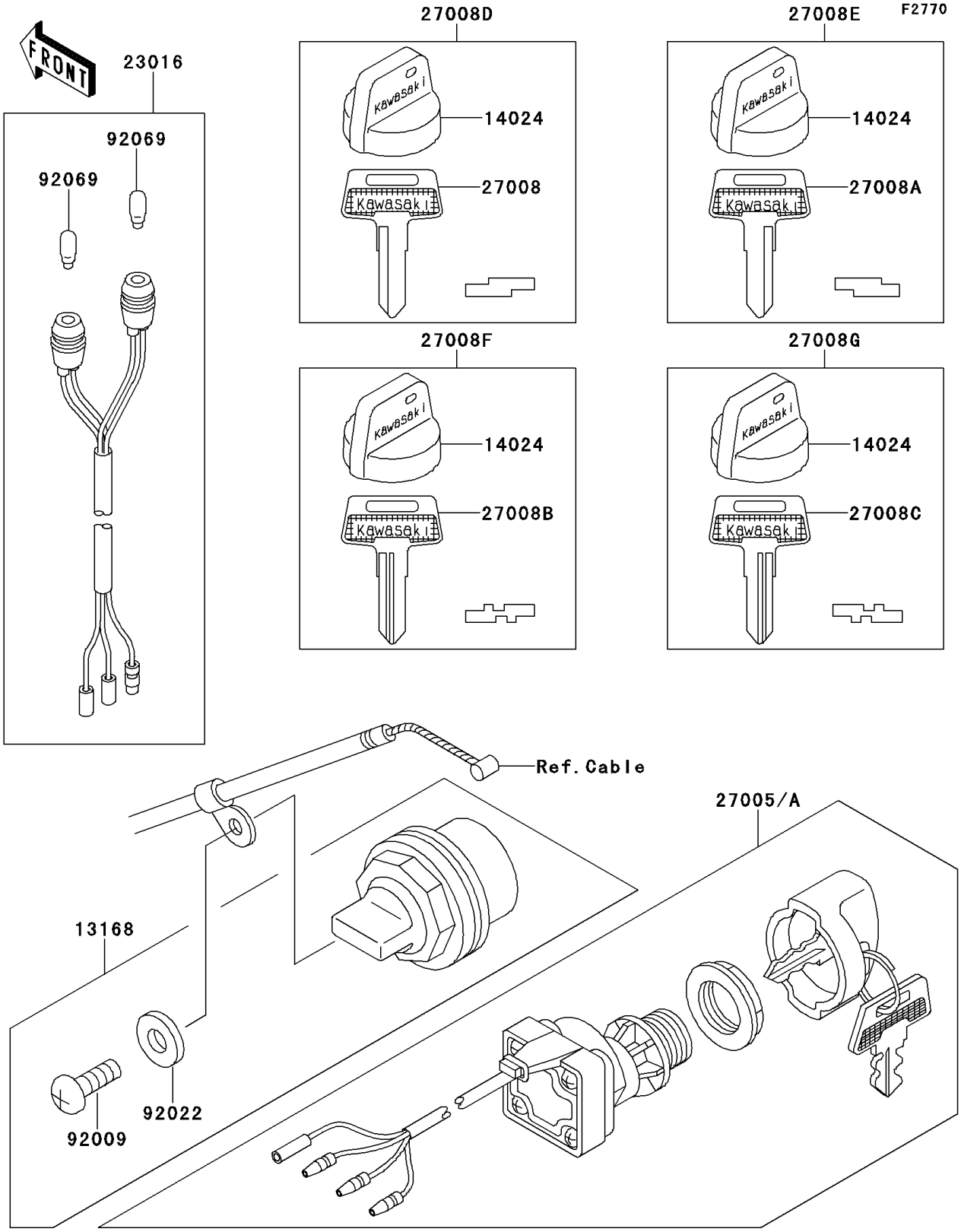

© 2025 Kawasaki Motors Corp., U.S.A.

1992 Bayou 220 PARTS LIST

Ignition Switch

ITEM NAME	PART NUMBER	QUANTITY
LEVER,REVERSE LOCK (Ref # 13168)	13168-1352	1
COVER,KEY (Ref # 14024)	14024-1551	4
LAMP-ASSY,NEUTRAL&REVERSE (Ref # 23016)	23016-1083	1
SWITCH-ASSY-IGNITION (Ref # 27005)	27005-1131	1
KEY-LOCK,BLANK (Ref # 27008)	27008-1041	1
KEY-LOCK,BLANK (Ref # 27008A)	27008-1042	1
KEY-LOCK,BLANK (Ref # 27008B)	27008-1043	1
KEY-LOCK,BLANK (Ref # 27008C)	27008-1044	1
KEY-LOCK,BLANK (Ref # 27008D)	27008-1132	1
KEY-LOCK,BLANK (Ref # 27008E)	27008-1133	1
KEY-LOCK,BLANK (Ref # 27008F)	27008-1134	1
KEY-LOCK,BLANK (Ref # 27008G)	27008-1135	1
SCREW,TAPPING,4X12 (Ref # 92009)	92009-1533	1
WASHER,PLAIN,4MM (Ref # 92022)	92022-1947	1
BULB,12V3W T-7 (Ref # 92069)	92069-1020	2

© 2025 Kawasaki Motors Corp., U.S.A.