1992 Bayou 220 PARTS DIAGRAM

Shock Absorber(s)

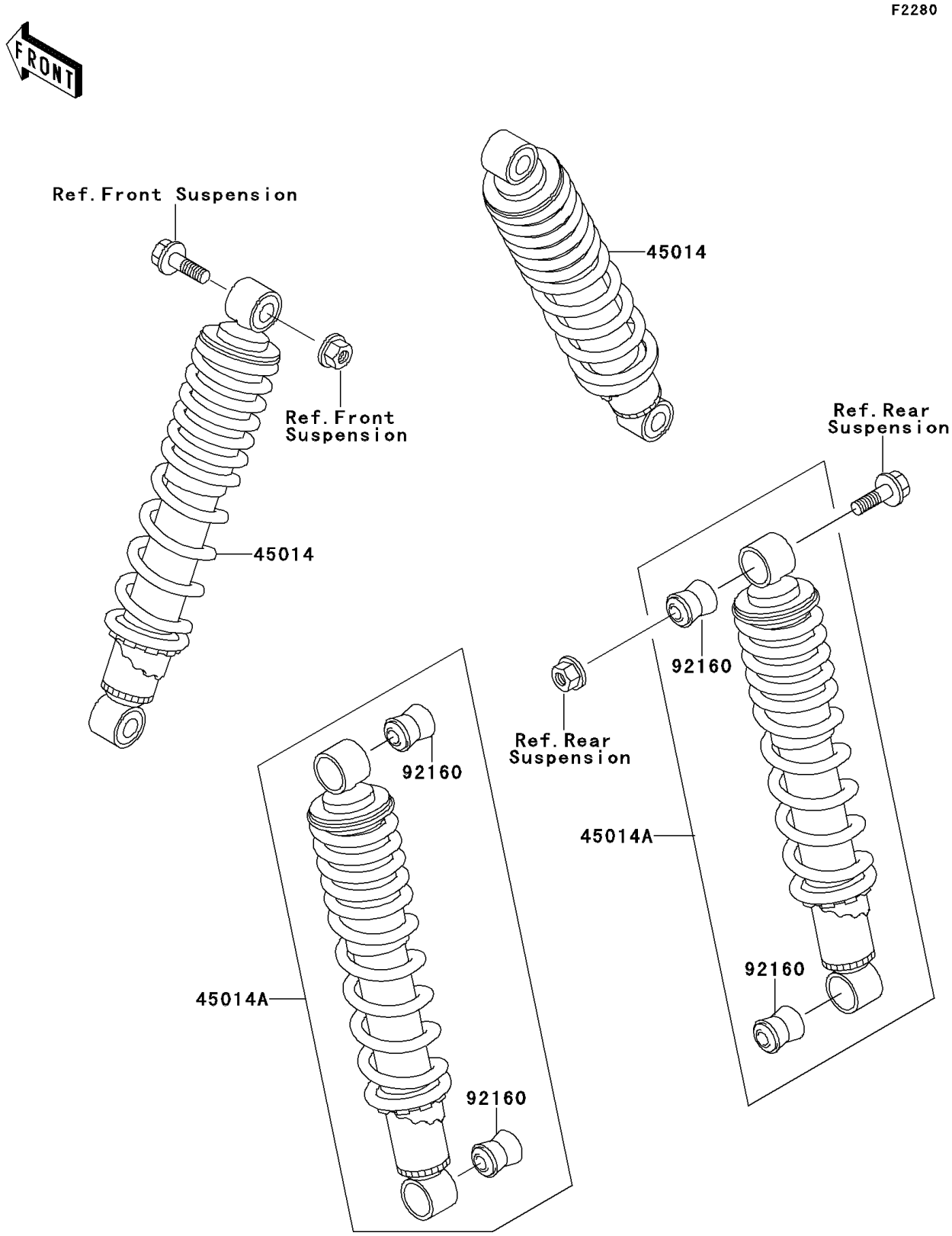

© 2025 Kawasaki Motors Corp., U.S.A.

1992 Bayou 220 PARTS LIST

Shock Absorber(s)

ITEM NAME	PART NUMBER	QUANTITY
SHOCKABSORBER,FR (Ref # 45014)	45014-1455	2
SHOCKABSORBER,RR (Ref # 45014A)	45014-1456	2
DAMPER,SHOCKABSORBER (Ref # 92160)	92160-1173	4

© 2025 Kawasaki Motors Corp., U.S.A.