1992 Bayou 220 PARTS DIAGRAM

Front Hub

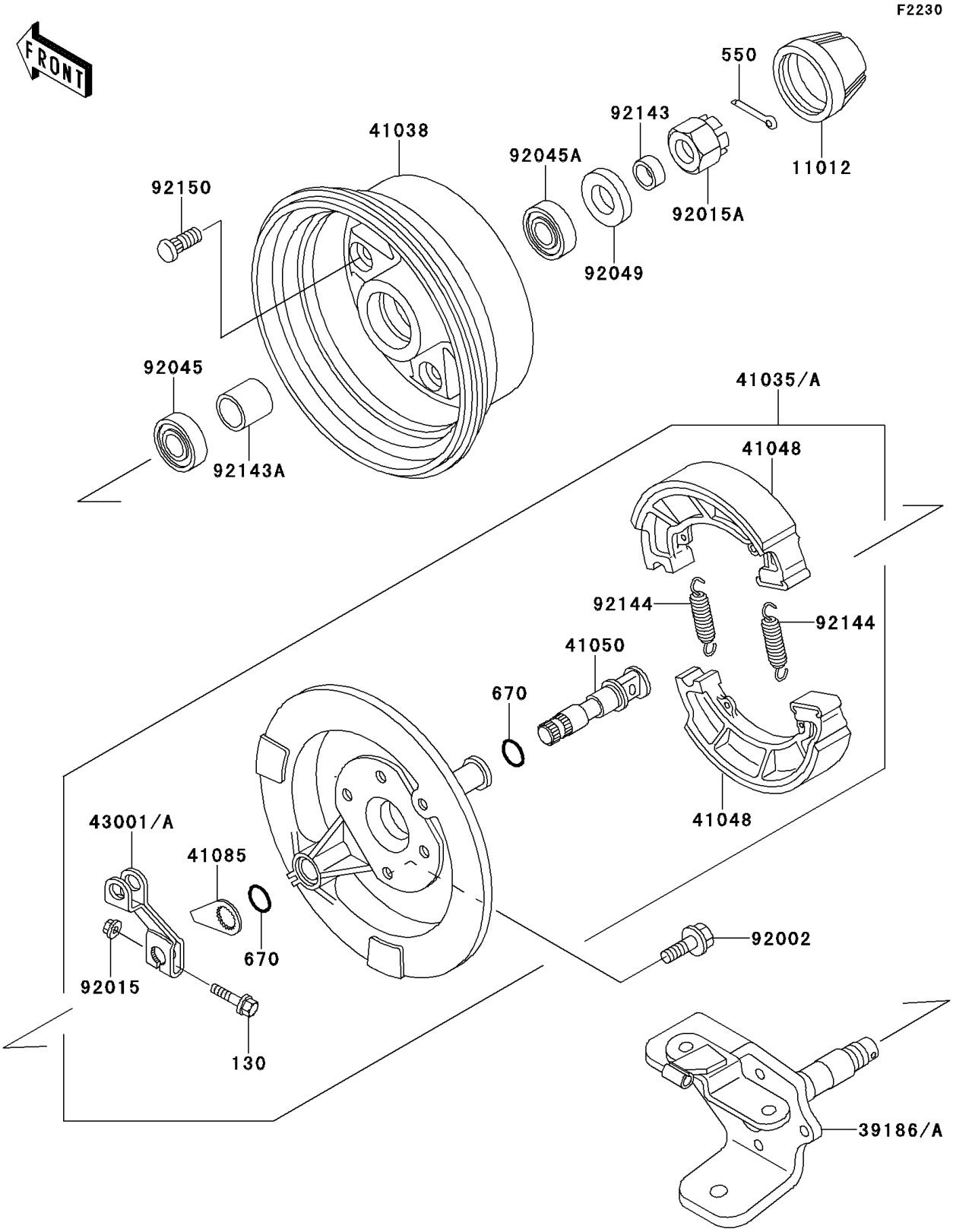

© 2025 Kawasaki Motors Corp., U.S.A.

1992 Bayou 220 PARTS LIST

Front Hub

ITEM NAME	PART NUMBER	QUANTITY
BOLT-FLANGED,6X35 (Ref # 130)	130H0635	2
PIN-COTTER,4.0X30 (Ref # 550)	550D4030	2
O RING,15MM (Ref # 670)	670B2015	4
CAP,WHEEL (Ref # 11012)	11012-1519	2
KNUCKLE,LH (Ref # 39186)	39186-1077	1
KNUCKLE,RH (Ref # 39186A)	39186-1078	1
PANEL-ASSY-BRAKE,FR,LH (Ref # 41035)	41035-1302	1
PANEL-ASSY-BRAKE,FR,RH (Ref # 41035A)	41035-1303	1
DRUM,FRONT BRAKE (Ref # 41038)	41038-1189	2
SHOE-BRAKE (Ref # 41048)	41048-1068	4
CAM-BRAKE (Ref # 41050)	41050-1081	2
INDICATOR (Ref # 41085)	41085-1059	2
LEVER-BRAKE,LH (Ref # 43001)	43001-1228	1
LEVER-BRAKE,RH (Ref # 43001A)	43001-1229	1
BOLT,FLANGED,8X18 (Ref # 92002)	92002-1957	8
NUT,FLANGED,6MM,BLACK (Ref # 92015)	92015-1233	2
NUT,CASTLE,16MM (Ref # 92015A)	92015-1947	2
BEARING-BALL,60042RD (Ref # 92045)	92045-1198	2
BEARING-BALL,6203DDU2 AV2S (Ref # 92045A)	92045-1228	2
SEAL-OIL (Ref # 92049)	92049-1318	2
COLLAR,16X22X10.5 (Ref # 92143)	92143-1117	2
COLLAR,20X25.4X25 (Ref # 92143A)	92143-1118	2
SPRING,BRAKE SHOE (Ref # 92144)	92144-1225	4
BOLT (Ref # 92150)	92150-1289	8

© 2025 Kawasaki Motors Corp., U.S.A.