1992 Bayou 220 PARTS DIAGRAM

Front Fender(s)

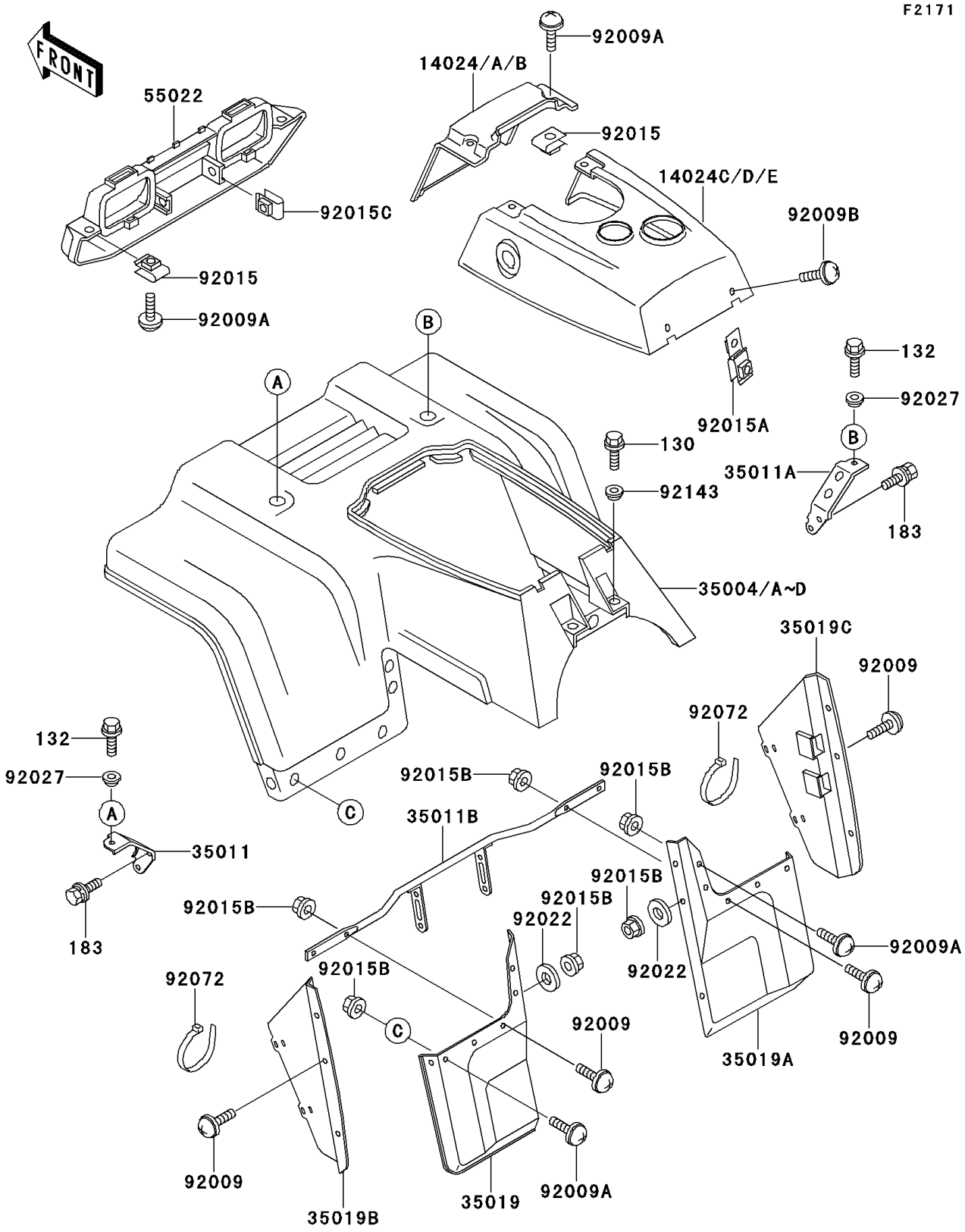

© 2025 Kawasaki Motors Corp., U.S.A.

1992 Bayou 220 PARTS LIST

Front Fender(s)

ITEM NAME	PART NUMBER	QUANTITY
BOLT-FLANGED,6X16 (Ref # 130)	130C0616	2
BOLT-FLANGED-SMALL (Ref # 132)	132J0820	2
BOLT-UPSET-WS-SMALL (Ref # 183)	183J0814	2
COVER,FRONT FENDER,FR,GRAY (Ref # 14024)	14024-1475-RG	1
COVER,FRONT FENDER,FR,F.RED (Ref # 14024B)	14024-1475-6L	1
COVER,FRONT FENDER,RR,GRAY (Ref # 14024C)	14024-1476-RG	1
COVER,FRONT FENDER,RR,F.RED (Ref # 14024E)	14024-1476-6L	1
FENDER-FRONT,M.B.GRAY (Ref # 35004A)	35004-1207-RF	1
FENDER-FRONT,BLACK (Ref # 35004C)	35004-1207-6D	1
STAY,FRONT FENDER,LH (Ref # 35011)	35011-1361	1
STAY,FRONT FENDER,RH (Ref # 35011A)	35011-1362	1
STAY,FRONT FLAP (Ref # 35011B)	35011-1368	1
FLAP,FR,LH (Ref # 35019)	35019-1195	1
FLAP,FR,RH (Ref # 35019A)	35019-1196	1
FLAP,FR,INSIDE,LH (Ref # 35019B)	35019-1197	1
FLAP,FR,INSIDE,RH (Ref # 35019C)	35019-1198	1
COVER-HEAD LAMP,BLACK (Ref # 55022)	55022-1060-6D	1
SCREW,6X18,BLACK (Ref # 92009)	92009-1181	10
SCREW,6X14 (Ref # 92009A)	92009-1288	12
SCREW,6X10 (Ref # 92009B)	92009-1402	2
NUT,6MM (Ref # 92015)	92015-1094	4
NUT,PLATE (Ref # 92015A)	92015-1667	2
NUT,LOCK,FLANGED,6MM (Ref # 92015B)	92015-1675	18
NUT,CLIP,8MM (Ref # 92015C)	92015-1691	2
WASHER,6.5X20X1.6 (Ref # 92022)	92022-1557	6
COLLAR (Ref # 92027)	92027-1908	2
BAND,L=149 (Ref # 92072)	92072-031	4
COLLAR,L=6.5 (Ref # 92143)	92143-1025	2

© 2025 Kawasaki Motors Corp., U.S.A.