1992 Bayou 220 PARTS DIAGRAM

Frame Fittings

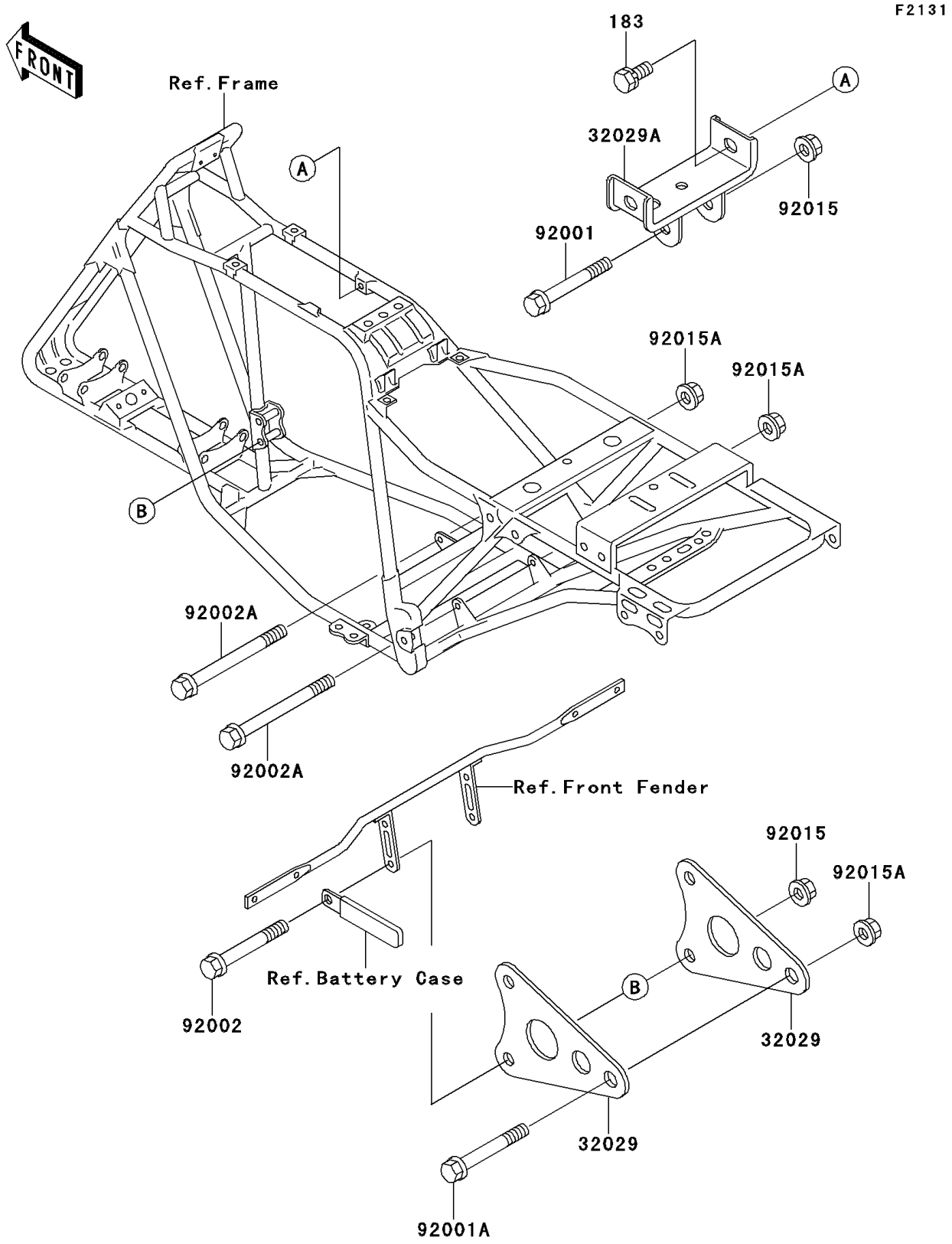

© 2025 Kawasaki Motors Corp., U.S.A.

1992 Bayou 220 PARTS LIST

Frame Fittings

ITEM NAME	PART NUMBER	QUANTITY
BOLT-UPSET-WS-SMALL (Ref # 183)	183J0814	2
BRACKET-ENGINE,FR (Ref # 32029)	32029-1548	2
BRACKET-ENGINE,TOP (Ref # 32029A)	32029-1549	1
BOLT,FLANGED,8X50 (Ref # 92001)	92001-1614	1
BOLT,FLANGED,10X85 (Ref # 92001A)	92001-1619	1
BOLT,FLANGED,8X90 (Ref # 92002)	92002-1401	2
BOLT,FLANGED,10X140 (Ref # 92002A)	92002-1965	2
NUT,FLANGED,8MM,BLACK (Ref # 92015)	92015-1183	3
NUT,FLANGED,10MM (Ref # 92015A)	92015-1727	3

© 2025 Kawasaki Motors Corp., U.S.A.