1992 Bayou 220 PARTS DIAGRAM

Valve(s)

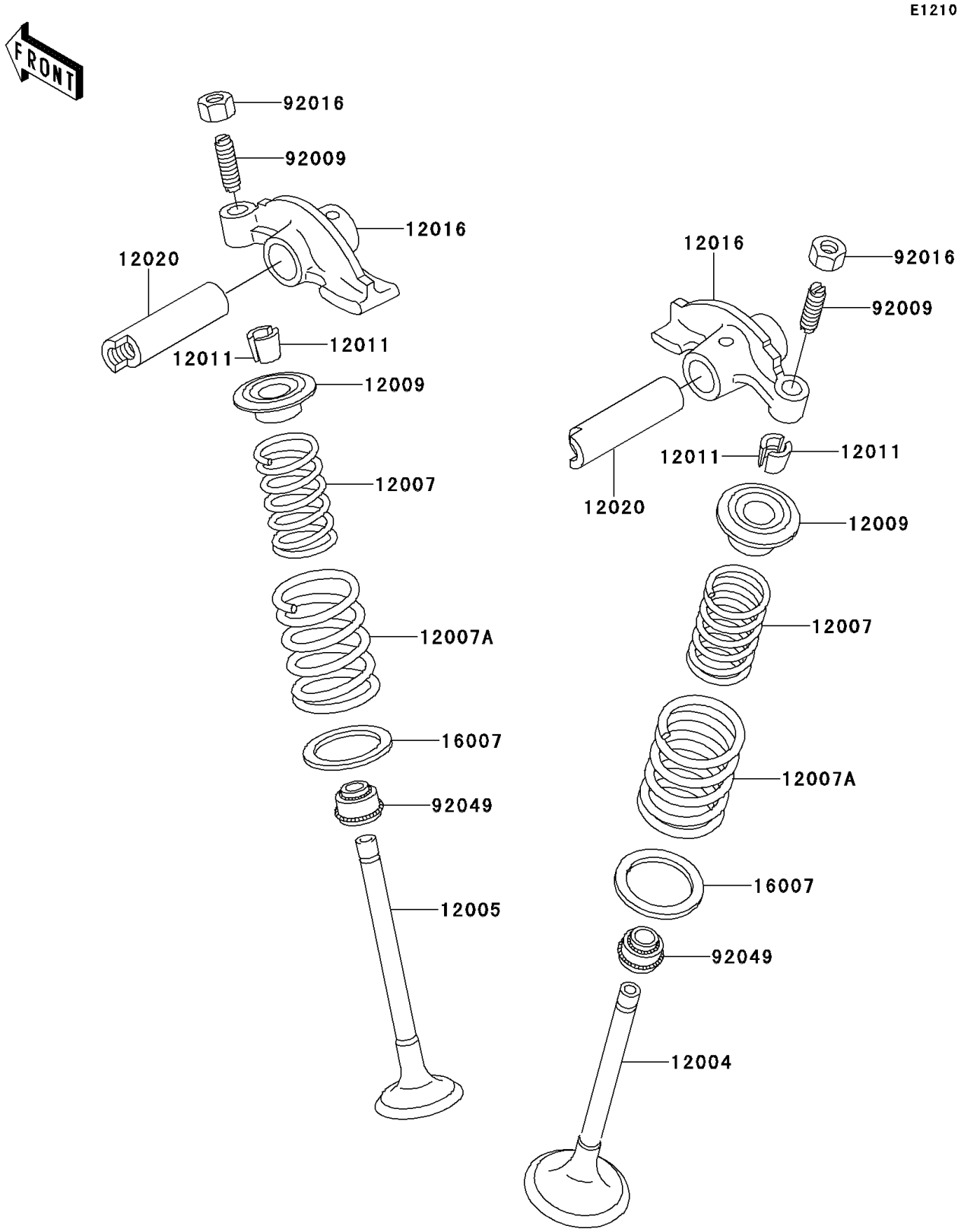

© 2025 Kawasaki Motors Corp., U.S.A.

1992 Bayou 220 PARTS LIST

Valve(s)

ITEM NAME	PART NUMBER	QUANTITY
VALVE-INTAKE (Ref # 12004)	12004-1082	1
VALVE-EXHAUST (Ref # 12005)	12005-1093	1
SPRING-ENGINE VALVE,INNER (Ref # 12007)	12007-1001	2
SPRING-ENGINE VALVE,OUTER (Ref # 12007A)	12007-1002	2
RETAINER-VALVE SPRING (Ref # 12009)	12009-1001	2
COLLET (Ref # 12011)	12011-1003	4
ARM-ROCKER (Ref # 12016)	12016-1099	2
SHAFT-ROCKER (Ref # 12020)	12020-1053	2
SEAT-SPRING (Ref # 16007)	16007-1106	2
SCREW,6MM (Ref # 92009)	92009-1032	2
NUT,6MM (Ref # 92016)	92016-061	2
SEAL-OIL,RVC2-5.5X8.5X8.3 (Ref # 92049)	92049-1062	2

© 2025 Kawasaki Motors Corp., U.S.A.