1992 Bayou 220 PARTS DIAGRAM

Muffler(s)

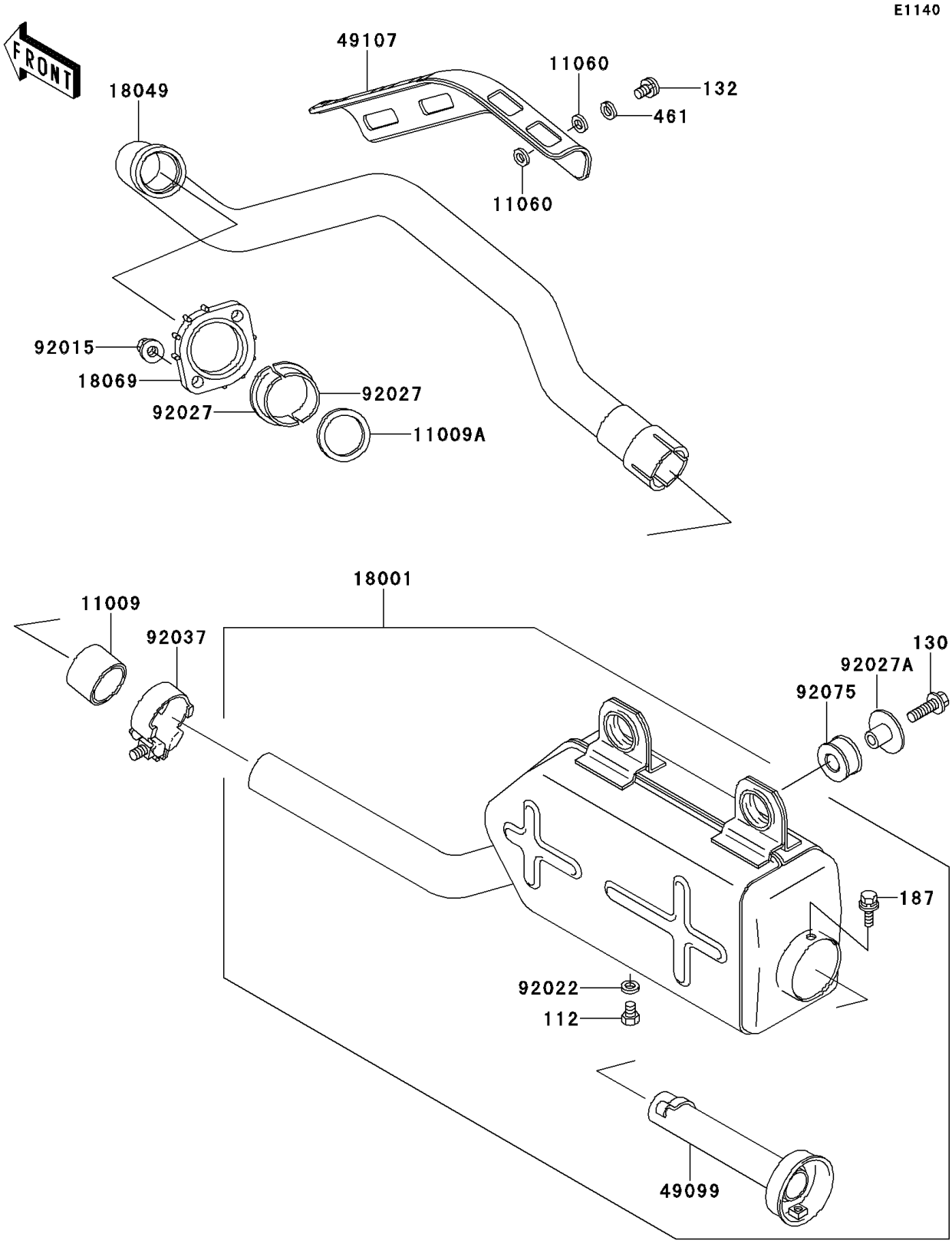

© 2025 Kawasaki Motors Corp., U.S.A.

1992 Bayou 220 PARTS LIST

Muffler(s)

ITEM NAME	PART NUMBER	QUANTITY
BOLT-UPSET (Ref # 112)	112B0608	1
BOLT-FLANGED,8X30 (Ref # 130)	130J0830	2
BOLT-FLANGED-SMALL,6X10 (Ref # 132)	132J0610	2
BOLT-UPSET-WSP (Ref # 187)	187B0612	1
WASHER-SPRING,6MM,BLACK (Ref # 461)	461K0600	2
GASKET,EXHAUST PIPE CONNECTING (Ref # 11009)	11009-1718	1
GASKET,EXHAUST PIPE HOLDER (Ref # 11009A)	11009-1866	1
GASKET,6.2X11.5X1.5 (Ref # 11060)	11060-1109	4
MUFFLER (Ref # 18001)	18001-1667	1
PIPE-EXHAUST (Ref # 18049)	18049-1415	1
HOLDER-EXHAUST PIPE (Ref # 18069)	18069-1078	1
BAFFLE-PIPE MUFFLER (Ref # 49099)	49099-1249	1
COVER-EXHAUST PIPE (Ref # 49107)	49107-1074	1
NUT,6MM (Ref # 92015)	92015-1365	2
WASHER,6.2X11X1 (Ref # 92022)	92022-304	1
COLLAR,L=14.5 (Ref # 92027)	92027-1142	2
COLLAR,MUFFLER (Ref # 92027A)	92027-1981	2
CLAMP (Ref # 92037)	92037-1956	1
DAMPER,MUFFLER (Ref # 92075)	92075-1809	2

© 2025 Kawasaki Motors Corp., U.S.A.