2014 W800 (European) PARTS DIAGRAM

Fuel Injection

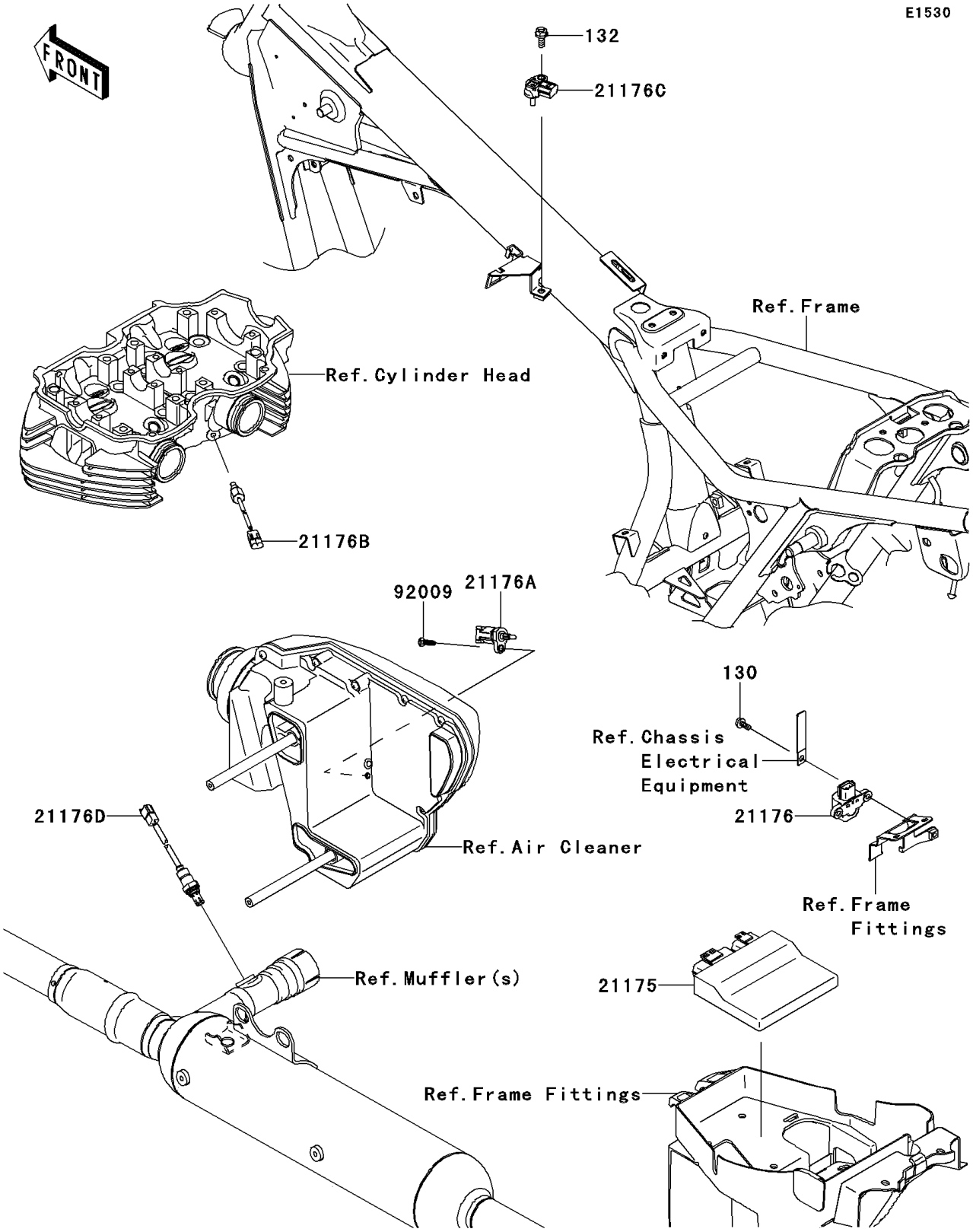

© 2024 Kawasaki Motors Corp., U.S.A.

2014 W800 (European) PARTS LIST

Fuel Injection

ITEM NAME	PART NUMBER	QUANTITY
BOLT-FLANGED,5X12 (Ref # 130)	130BA0512	1
BOLT-FLANGED-SMALL,6X16 (Ref # 132)	132BA0616	1
CONTROL UNIT-ELECTRONIC (Ref # 21175)	21175-0336	1
SENSOR,VEHICLE-DOWN (Ref # 21176)	21176-0026	1
SENSOR,AIR TEMPERATURE (Ref # 21176A)	21176-0048	1
SENSOR,TEMP (Ref # 21176B)	21176-0072	1
SENSOR,PRESSURE (Ref # 21176C)	21176-0111	1
SENSOR,OXYGEN,LH (Ref # 21176D)	21176-0139	1
SCREW,TAPPING,5X16 (Ref # 92009)	92009-1984	1

© 2024 Kawasaki Motors Corp., U.S.A.