2014 W800 (European) PARTS DIAGRAM

Throttle

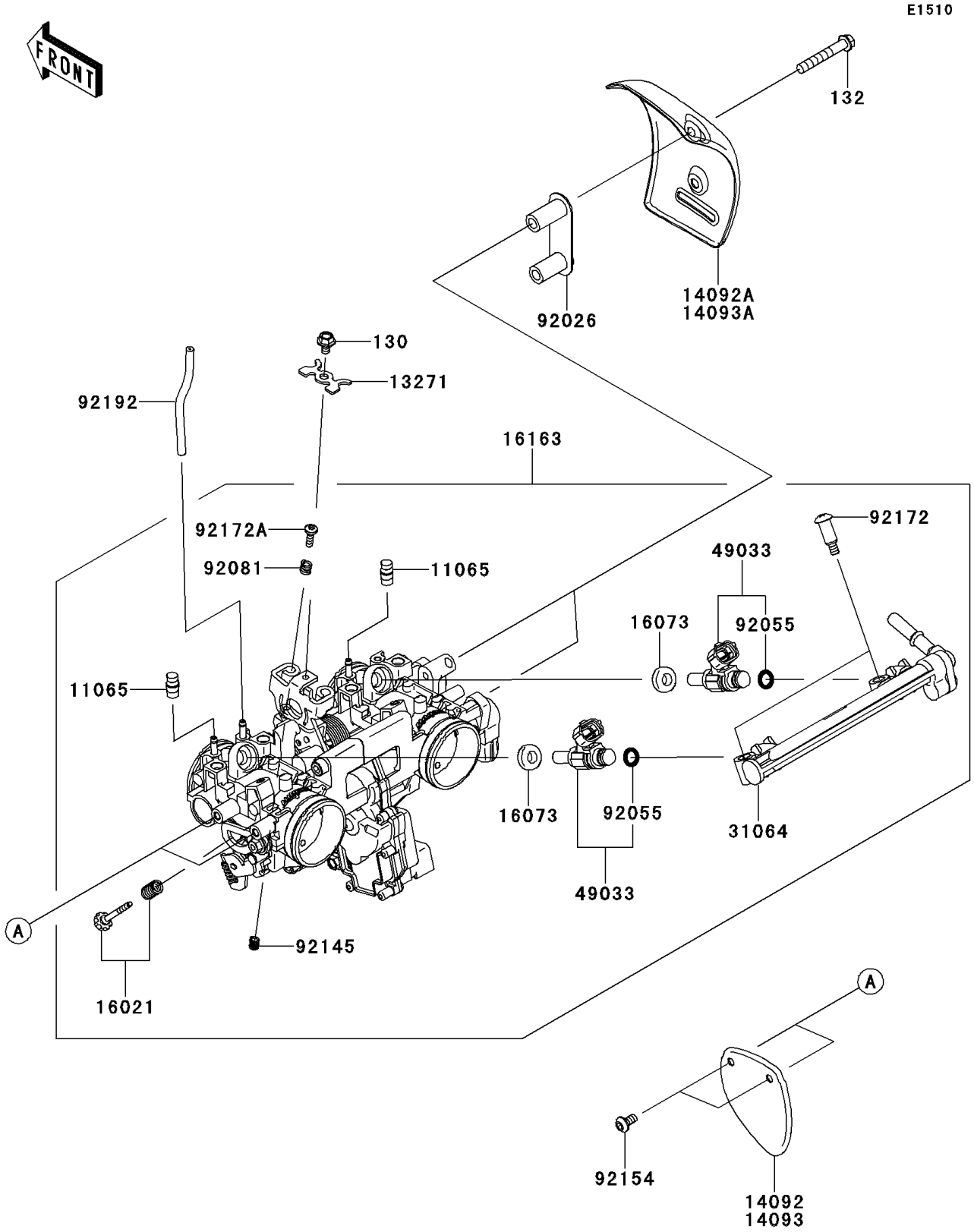

© 2024 Kawasaki Motors Corp., U.S.A.

2014 W800 (European) PARTS LIST

Throttle

ITEM NAME	PART NUMBER	QUANTITY
BOLT-FLANGED,5X8 (Ref # 130)	130BA0508	1
BOLT-FLANGED-SMALL,6X40 (Ref # 132)	132E0640	2
CAP (Ref # 11065)	11065-0018	2
PLATE (Ref # 13271)	13271-0056	1
COVER,LH (Ref # 14093)	14093-0023	1
COVER,RH (Ref # 14093A)	14093-0024	1
SCREW-THROTTLE STOP (Ref # 16021)	16021-0054	1
INSULATOR (Ref # 16073)	16073-0129	2
THROTTLE-ASSY,TTK34 (Ref # 16163)	16163-0171	1
PIPE-COMP,FUEL (Ref # 31064)	31064-0591	1
NOZZLE-INJECTION (Ref # 49033)	49033-0028	2
SPACER (Ref # 92026)	92026-0166	1
RING-O,INJECTION NOZZLE (Ref # 92055)	92055-0124	2
SPRING (Ref # 92081)	92081-1620	1
SPRING (Ref # 92145)	92145-0816	1
BOLT,SOCKET,5X10 (Ref # 92154)	92154-0211	2
SCREW,PIPE INJECTION (Ref # 92172)	92172-0064	2
SCREW (Ref # 92172A)	92172-0505	1
TUBE,3X7X110 (Ref # 92192)	92192-0931	1

© 2024 Kawasaki Motors Corp., U.S.A.