2013 W800 (European) PARTS DIAGRAM

Balancer

E1323

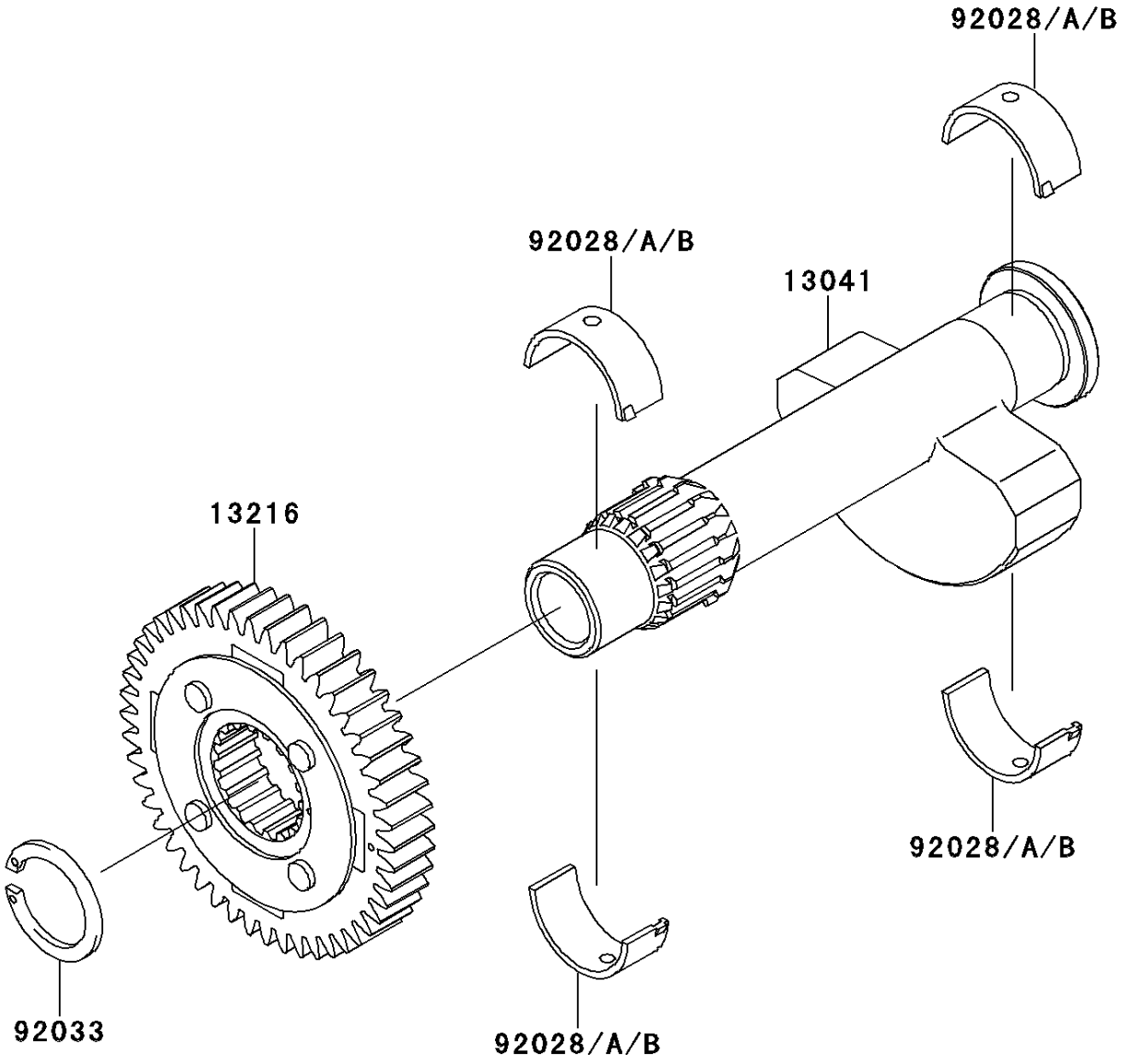

© 2024 Kawasaki Motors Corp., U.S.A.

2013 W800 (European) PARTS LIST

Balancer

ITEM NAME	PART NUMBER	QUANTITY
BALANCER (Ref # 13041)	13041-1124	1
GEAR-COMP,BALANCER (Ref # 13216)	13216-1179	1
BUSHING,BALANCER SHAFT,BLUE (Ref # 92028)	92028-1909	4
BUSHING,BALANCER SHAFT,BLACK (Ref # 92028A)	92028-1910	AR
BUSHING,BALANCER SHAFT,BROWN (Ref # 92028B)	92028-1911	AR
RING-SNAP (Ref # 92033)	92033-1302	1

© 2024 Kawasaki Motors Corp., U.S.A.