2016 ER-6n PARTS DIAGRAM

Accessory(Single Seat Cover)

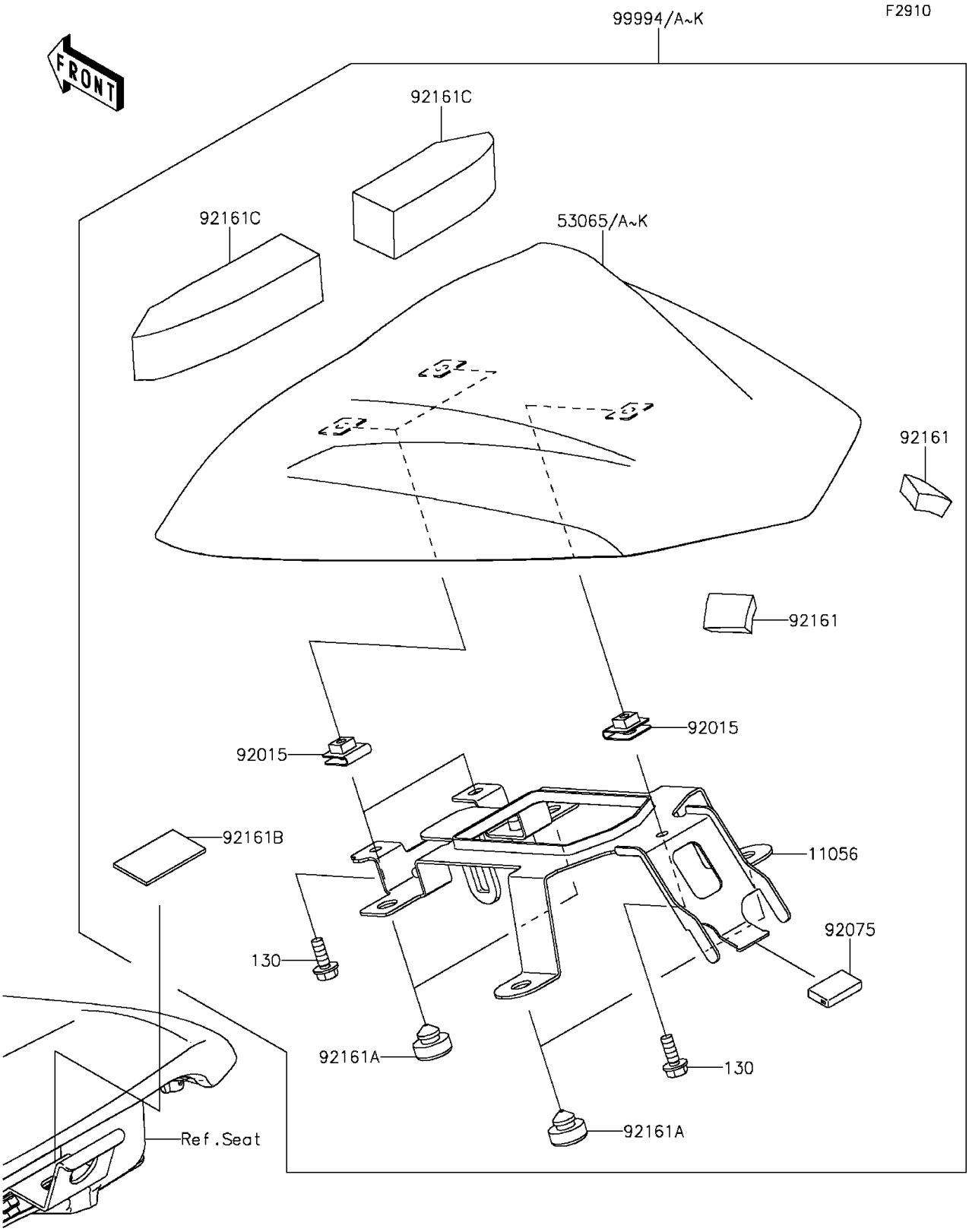

© 2025 Kawasaki Motors Corp., U.S.A.

2016 ER-6n PARTS LIST

Accessory(Single Seat Cover)

ITEM NAME	PART NUMBER	QUANTITY
BOLT-FLANGED,6X16 (Ref # 130)	130BB0616	3
BRACKET (Ref # 11056)	11056-1020	1
COVER SEAT,M.C.GRAY (Ref # 53065G)	53065-0054-51A	1
COVER SEAT,C.L.GREEN (Ref # 53065H)	53065-0054-51P	1
COVER SEAT,U.C.WHITE (Ref # 53065I)	53065-0054-53Q	1
NUT,CLAMP,6MM (Ref # 92015)	92015-1531	3
DAMPER (Ref # 92075)	92075-1446	1
DAMPER (Ref # 92161)	92161-0718	2
DAMPER,10X20X8 (Ref # 92161A)	92161-0855	4
DAMPER,45X25X2 (Ref # 92161B)	92161-1381	1
DAMPER (Ref # 92161C)	92161-1471	2
KIT-ACCESSORY,SEAT COVER,GRAY (Ref # 99994G)	99994-0235-51A	1
KIT-ACCESSORY,SEAT COVER,GRN (Ref # 99994H)	99994-0235-51P	1
KIT-ACCESSORY,SEAT COVER,WHITE (Ref # 99994I)	99994-0235-53Q	1

© 2025 Kawasaki Motors Corp., U.S.A.