2016 ER-6n PARTS DIAGRAM

Cowling

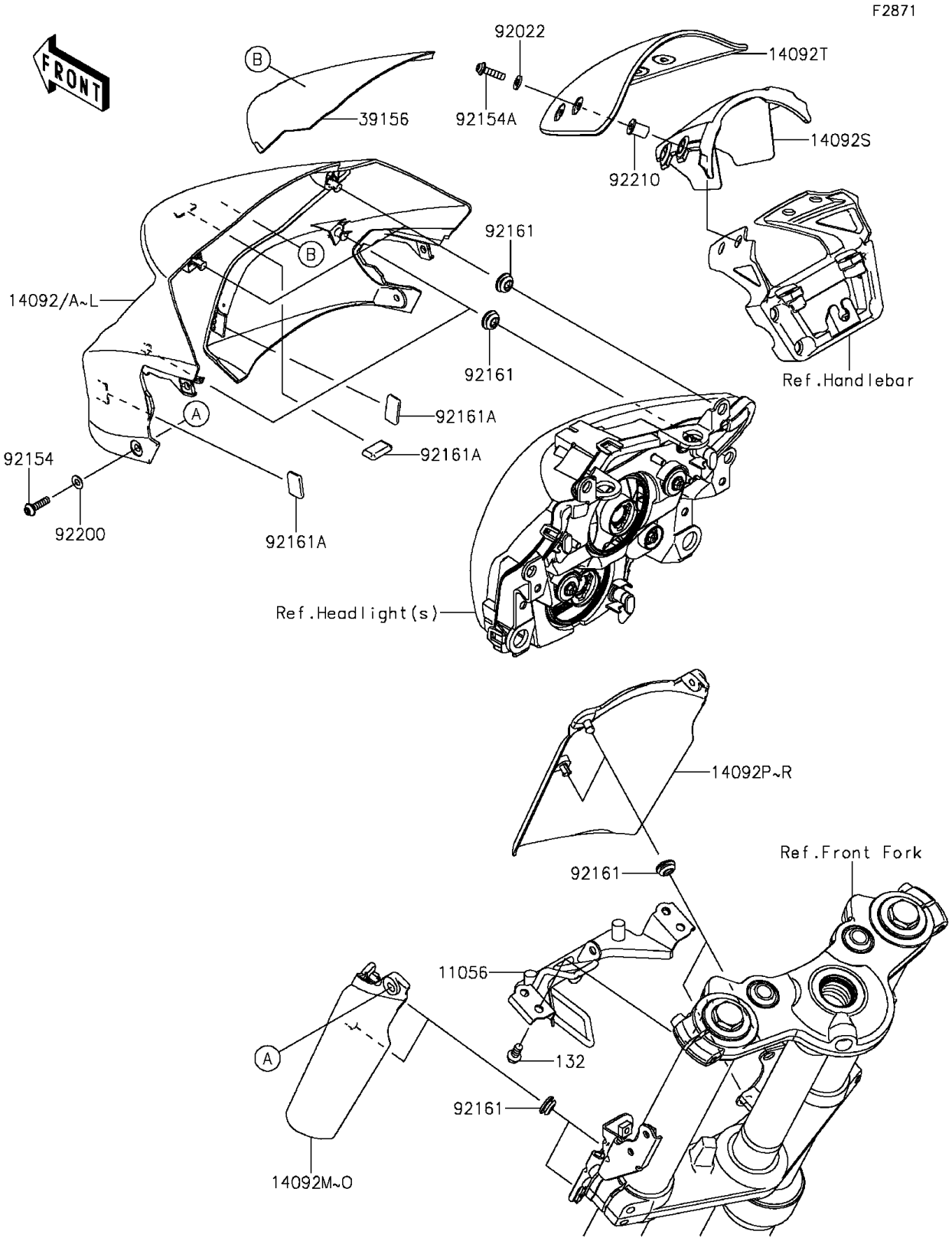

© 2025 Kawasaki Motors Corp., U.S.A.

2016 ER-6n PARTS LIST

Cowling

ITEM NAME	PART NUMBER	QUANTITY
BOLT-FLANGED-SMALL,6X12 (Ref # 132)	132BA0612	2
BRACKET,HEAD LAMP (Ref # 11056)	11056-0794	1
COVER,HEAD LAMP,M.C.GRAY (Ref # 14092H)	14092-0734-51A	1
COVER,HEAD LAMP,C.L.GREEN (Ref # 14092I)	14092-0734-51P	1
COVER,HEAD LAMP,U.C.WHITE (Ref # 14092J)	14092-0734-53Q	1
COVER,FORK,LH,M.S.BLACK (Ref # 14092N)	14092-0735-660	1
COVER,FORK,LH,M.F.S.BLACK (Ref # 14092O)	14092-0735-739	1
COVER,FORK,RH,M.S.BLACK (Ref # 14092Q)	14092-0736-660	1
COVER,FORK,RH,M.F.S.BLACK (Ref # 14092R)	14092-0736-739	1
COVER,METER,LWR (Ref # 14092S)	14092-0737	1
COVER,METER,UPP (Ref # 14092T)	14092-0771	1
PAD (Ref # 39156)	39156-0844	1
WASHER,NYLON,5.3X11.5X1.5 (Ref # 92022)	92022-1521	4
BOLT,SOCKET,5X20 (Ref # 92154)	92154-0210	2
BOLT,SOCKET,5X20 (Ref # 92154A)	92154-0919	4
DAMPER (Ref # 92161)	92161-0631	8
DAMPER,12X23 (Ref # 92161A)	92161-1367	3
WASHER,NYLON,5.3X11.5X0.5 (Ref # 92200)	92200-1480	2
NUT,WELL,5MM (Ref # 92210)	92210-0498	4

© 2025 Kawasaki Motors Corp., U.S.A.