2016 ER-6n PARTS DIAGRAM

Decals(Green)(EGF)

F2861L

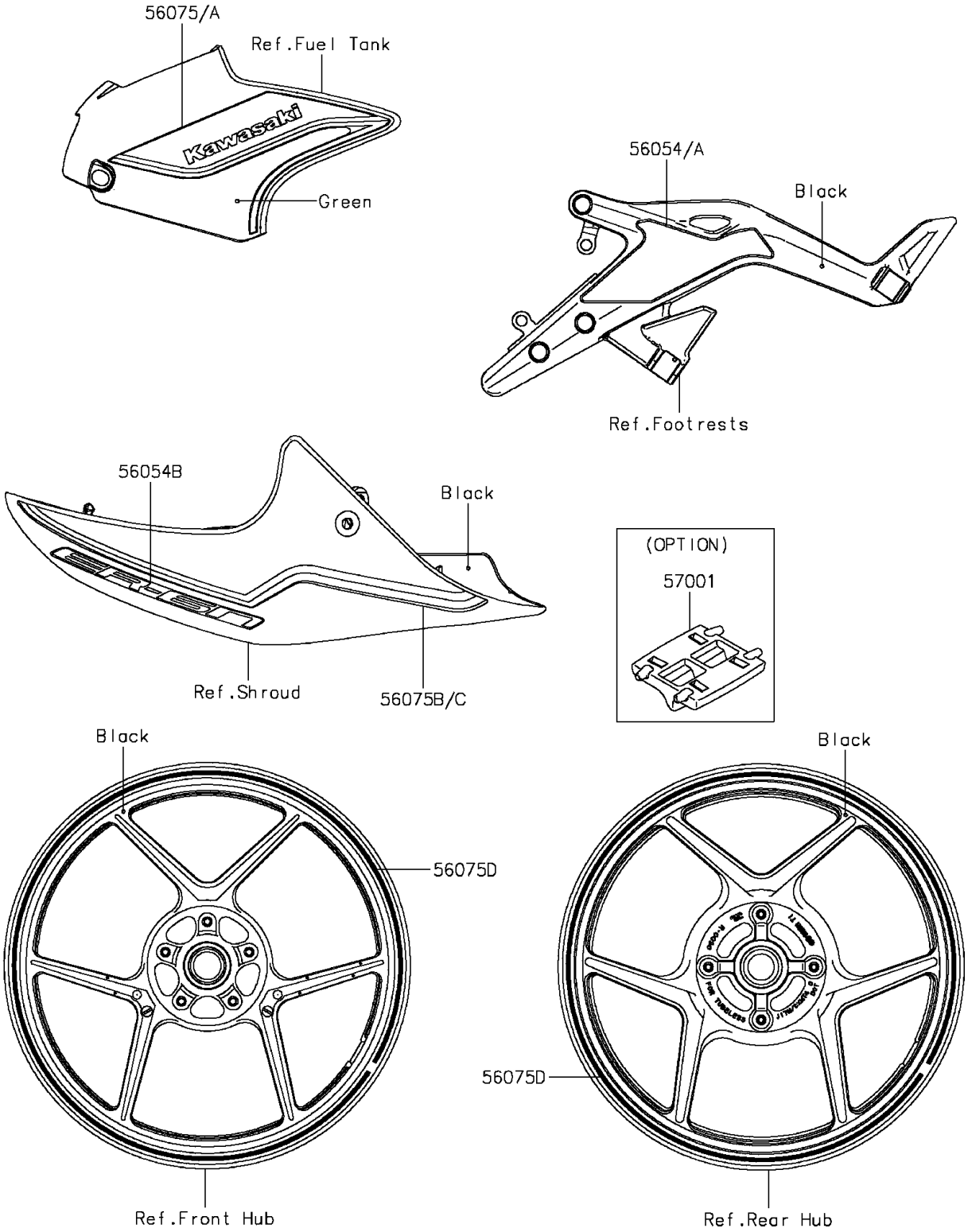

© 2025 Kawasaki Motors Corp., U.S.A.

2016 ER-6n PARTS LIST

Decals(Green)(EGF)

ITEM NAME	PART NUMBER	QUANTITY
MARK,STEP STAY,LH (Ref # 56054)	56054-1068	1
MARK,STEP STAY,RH (Ref # 56054A)	56054-1069	1
MARK,SHROUD,ER-6N (Ref # 56054B)	56054-1885	2
PATTERN,TANK COVER,LH (Ref # 56075)	56075-1085	1
PATTERN,TANK COVER,RH (Ref # 56075A)	56075-1086	1
PATTERN,SHROUD,LH (Ref # 56075B)	56075-1087	1
PATTERN,SHROUD,RH (Ref # 56075C)	56075-1088	1
PATTERN,WHEEL,GREEN,4X1353 (Ref # 56075D)	56075-1089	4
RIM STRIPE APPLICATOR (Ref # 57001)	57001-1752	AR

© 2025 Kawasaki Motors Corp., U.S.A.