2014 VULCAN® 900 CLASSIC PARTS DIAGRAM

Cylinder/Piston(s)

E1120

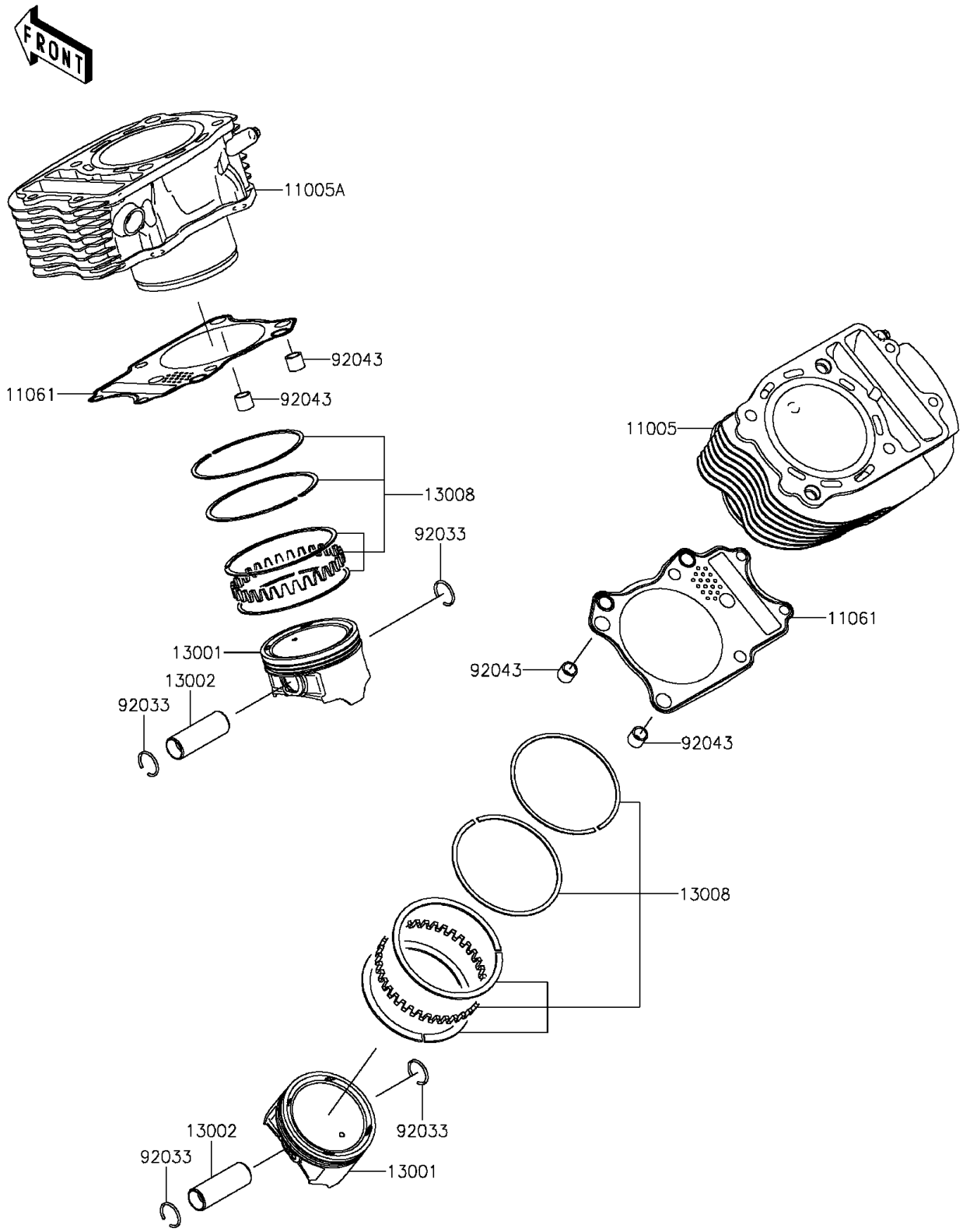

© 2024 Kawasaki Motors Corp., U.S.A.

2014 VULCAN® 900 CLASSIC PARTS LIST

Cylinder/Piston(s)

ITEM NAME	PART NUMBER	QUANTITY
CYLINDER-ENGINE,RR (Ref # 11005)	11005-0062	1
CYLINDER-ENGINE,FR (Ref # 11005A)	11005-0085	1
GASKET,CYLINDER BASE (Ref # 11061)	11061-0284	2
PISTON-ENGINE (Ref # 13001)	13001-0067	2
PIN-PISTON (Ref # 13002)	13002-0011	2
RING-SET-PISTON (Ref # 13008)	13008-0021	2
RING-SNAP (Ref # 92033)	92033-1188	4
PIN,11X14X12.3 (Ref # 92043)	92043-1266	4

© 2024 Kawasaki Motors Corp., U.S.A.