2013 KLX450R (Australian)

PARTS DIAGRAM

Stand(s)

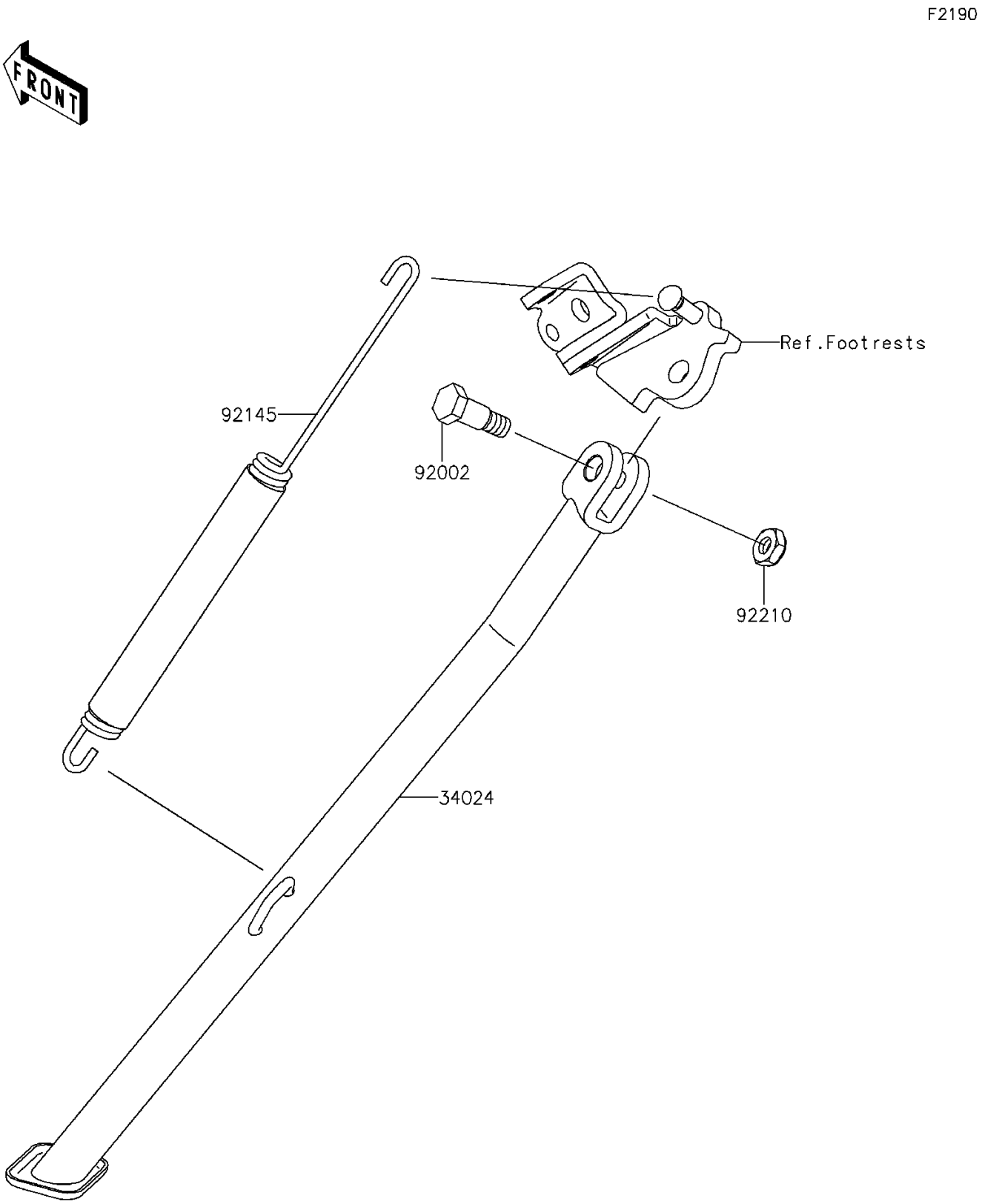

© 2026 Kawasaki Motors Corp., U.S.A.

2013 KLX450R (Australian)

PARTS LIST

Stand(s)

ITEM NAME	PART NUMBER	QUANTITY
STAND-SIDE,P.SILVER (Ref # 34024)	34024-0036-458	1
BOLT,SIDE STAND (Ref # 92002)	92002-1813	1
SPRING,SIDE STAND (Ref # 92145)	92145-0454	1
NUT,LOCK,10MM (Ref # 92210)	92210-0784	1

© 2026 Kawasaki Motors Corp., U.S.A.