2009 Ultra 260X PARTS DIAGRAM

Meters

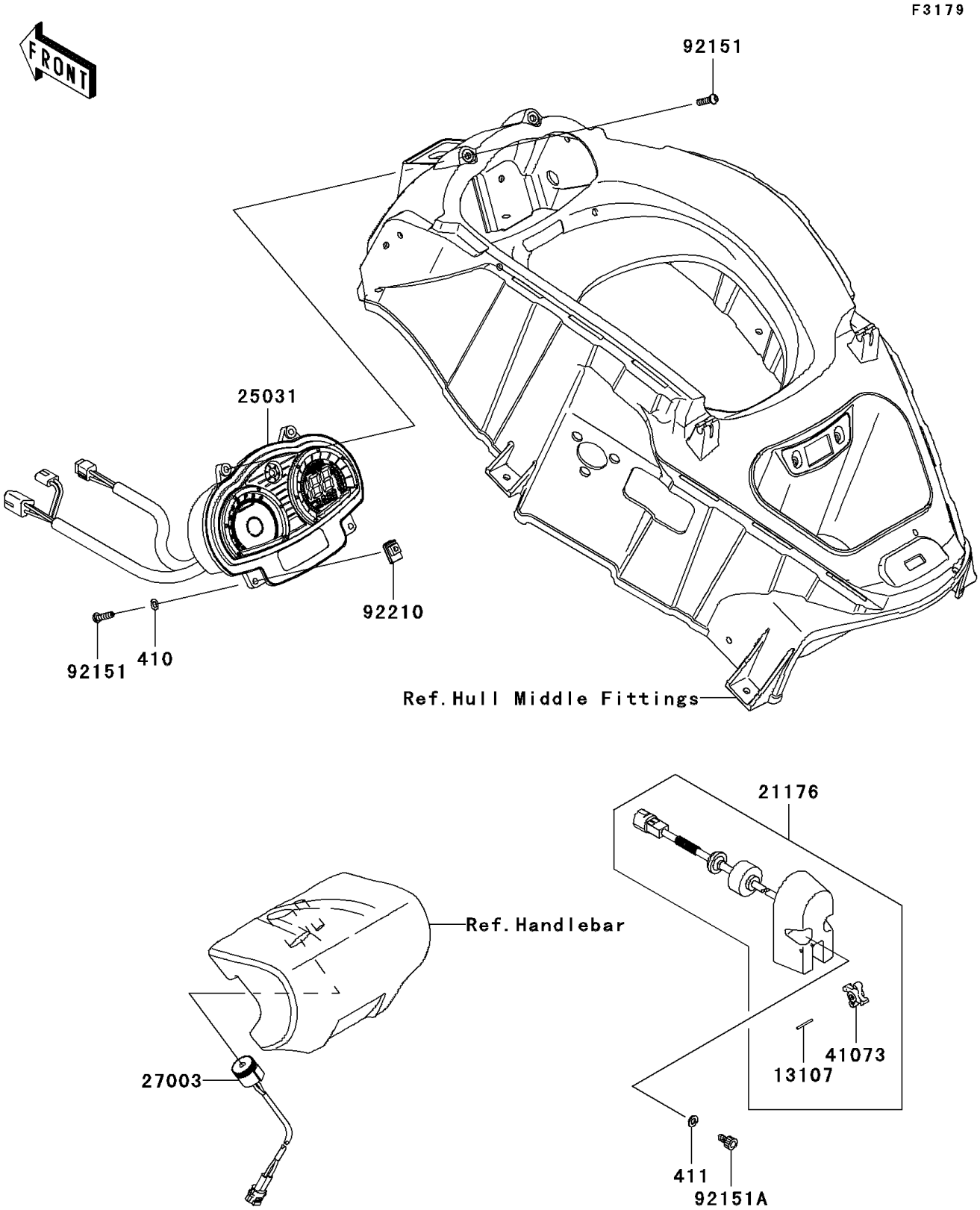

© 2024 Kawasaki Motors Corp., U.S.A.

2009 Ultra 260X PARTS LIST

Meters

ITEM NAME	PART NUMBER	QUANTITY
WASHER-PLAIN-SMALL,6MM (Ref # 410)	410S0600	2
WASHER-PLAIN,6MM (Ref # 411)	411S0600	2
SHAFT (Ref # 13107)	13107-3754	1
SENSOR,SPEEDOMETER,F.BLACK (Ref # 21176)	21176-3760-6Z	1
METER-ASSY (Ref # 25031)	25031-3758	1
HORN (Ref # 27003)	27003-3706	1
WHEEL-ASSY,PADDLE (Ref # 41073)	41073-3701	1
BOLT,SOCKET,6X20 (Ref # 92151)	92151-1749	4
BOLT,6X10 (Ref # 92151A)	92151-3704	2
NUT,6MM (Ref # 92210)	92210-3768	2

© 2024 Kawasaki Motors Corp., U.S.A.